LIGHT DUTY STEEL FEATURES & BENEFITS

Features & Benefits

Light Duty Steel grating is the workhorse of the industrial flooring market, finding applications in conveyor systems, operating plants, highways and bridge platforms and walkways, machinery floors, refineries, tank stairways and walkways, and power plants. The open grid construction of steel grating provides maximum passage for light, air circulation and drainage, while offering low installation and maintenance costs.

Grating Systems prides itself on offering the widest selection of Light Duty Steel grating available in the industry. As a stocking, manufacturer and fabricator of electro forge welded steel grating, we inventory a variety of sizes and spacings for shipment in panel form, or for fabrication per plans and specs. GSI specializes in engineering those tough jobs requiring intricate layout and fabrication.

In addition to fabricating standard electro-forge welded steel grating, GSI fabricates Dove Tail pressure locked grating, Riveted Steel grating, and Swaged Carbon and Stainless Steel grating. Dove Tail pressure locked, Riveted and Swaged grating offer smoother lines and a more pleasing appearance than the typical welded grating. While still industrial in nature, these grating types may be more appropriate than welded grating for some applications. Please contact our team for assistance in choosing the right Light Duty steel grating for your particular application.

Whether the requirement is for stock panels or custom fabrication, Grating Systems has you covered!

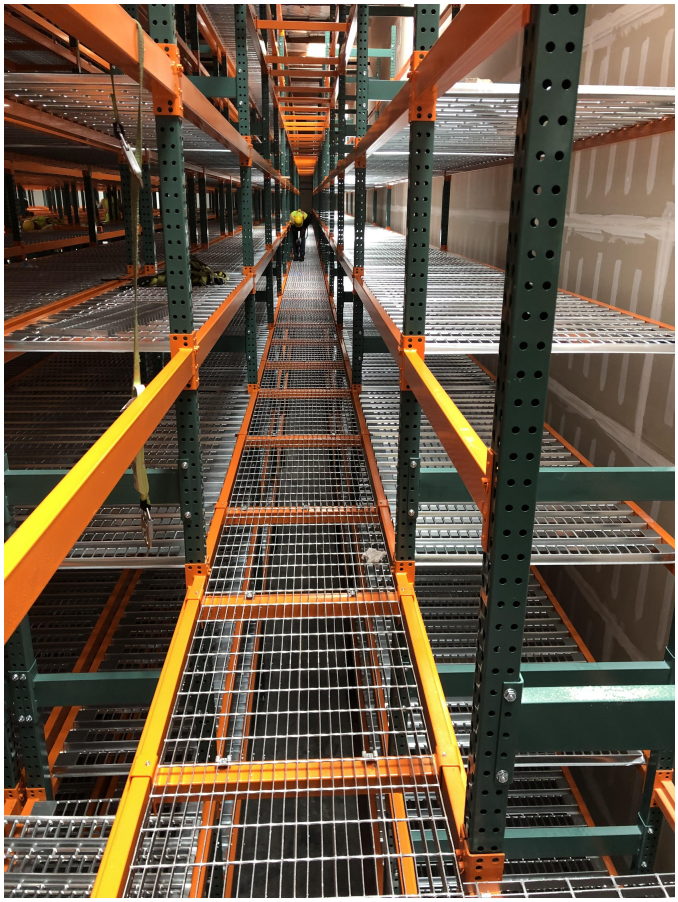

LIGHT DUTY STEEL PRODUCTS

Light Duty Welded Steel

Electro-forging, a machine process combining hydraulic pressure and heat fusion, is the most popular and economical method for manufacturing steel grating panels. GSI offers stock panels for immediate shipment, or custom fabricated sizes. Various spacings, bar depths, finishes, and OnGrip® Spray Traction Surface is also available.

Light Duty Steel Dove Tail

Dove tail pressure locked grating offers the high strength and stiffness of welded steel grating along with the smooth, clean lines of a flush top rectangular cross bar. A variety of bar depths, finishes and spacings are available including 1/4" and 1/2" which conform to ADA requirements. OnGrip® Spray Traction Surface is also available.

Light Duty Swaged Carbon Steel

Swaged Carbon Steel grating is similar in construction to our aluminum bar grating products. Rectangular bearing bars and tubular cross bars are joined together via the swaging process. This process keeps the material free from the warping and weld flash inherent in the electroforging process. This profile offers the same flexibility as our other mechanically locked grating products as to multiple spacings (including ADA requirements), bar depths and finishes. OnGrip® Spray Traction Surface is also available.

Light Duty Riveted Steel

Riveted grating is the oldest style of bar grating, but still the choice of many engineers due to its reliability and durability. GSI fabricates multiple sizes and spacings OnGrip® Spray Traction Surface is also available.

Light Duty PressLock

PressLock products are manufactured on our computer controlled production lines, where the bearing bars are notched and then "locked" with the cross bars at very high pressure. Available in increments of 7/16", PressLock offers a wide variety of mesh openings to match up to the appropriate loading requirements and project application. OnGrip® Spray Traction Surface is also available.

Light Duty Swaged Stainless Steel

Swaged Stainless Steel is offered in alloys of either Type 304 or 316. As with the swaged grating, this product is also manufactured free of the warping, twisting and burn marks which are characteristic of electroforged stainless grating. A variety of spacing options and bar depths are available, including those that meet ADA Requirements. OnGrip® Spray Traction Surface is also available.

LIGHT DUTY STEEL DESIGN CRITERIA

The tables of safe loads which follow have been computed using the following design parameters:

U = Uniform Load - lbs/ft^2
C = Concentrated Load - lbs/ft of grating width
S = Section Modulus - in^3/ft of grating width
I = Moment of Inertia - in^4/ft of grating width
L = Simple Clear Span - feet
D = Deflection - inches
E = Modulus of Elasticity (Carbon Steel = 29,000,000 psi, T-304 and T-316 Stainless Steel = 28,000,000 psi)
F = Allowable Bending Stress (Carbon Steel = 18,000 psi, T-304 and T-316 Stainless Steel = 20,000 psi)
M = Bending Moment

Design Service

Available at no charge to the specifying architect/engineer or fabricator, is access to a computer program which provides uniform load and deflection (actual or fraction of span) analysis of grating products. Just call, write or fax your design criteria – loading, span, allowable deflection, or grating size desired – and we will provide you with the information you require.

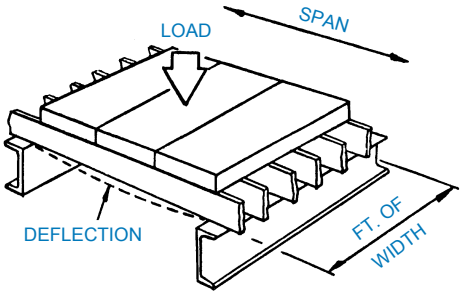

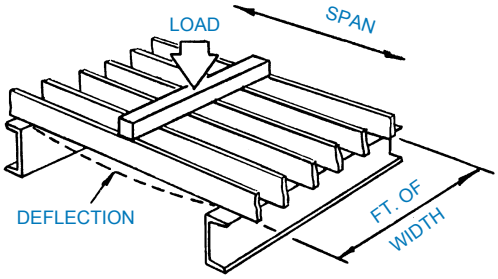

	Uniform Load	Concentrated Load
Step 1. Determine M:	$M = \frac{FS}{12}$	$M = \frac{FS}{12}$
Step 2. Determine U or C:	$U = \frac{8M}{L^2}$	$C = \frac{4M}{L}$
Step 3. Check D*:	$D = \frac{5UL\,(L \times 12)^3}{384\,EI}$	$D = \frac{C\,(L \times 12)^3}{48\,EI}$

**Deflection should be limited to 1/4" under 100# uniform load to afford pedestrian comfort.*

Light Duty Steel Grating is best suited for use in conjunction with pedestrian traffic, and for very light, rubber pneumatic tired rolling traffic (carts, dollies and hand trucks). For other rolling loads (forklifts, cars, trucks, etc.) see the Heavy Duty Steel Grating section.

LIGHT DUTY WELDED STEEL

W SERIES

Light duty steel grating is the workhorse of the industrial flooring market and is used for many different types of pedestrian (walking) applications. The open grid construction provides maximum passage for light, air circulation and drainage.

Electro-forging, a machine process combining hydraulic pressure and heat fusion, is readily available and an economical method for manufacturing steel grating panels. The bearing bar surface can be ordered smooth or with a serrated surface for maximum skid resistance. Also available in Stainless Steel, type 304 or 316, upon request. OnGrip® Spray Traction Surface is also available.

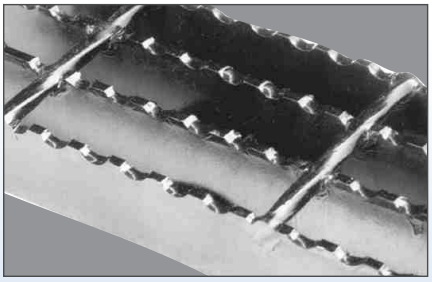

Serrated surface also available.

GRATING PROFILES AVAILABLE...

W SERIES Light Duty Welded Steel

All profiles shown below are also available with 2" cross bar centers. Product numbers would be 19-W-2, 15-W-2 and 11-W-2

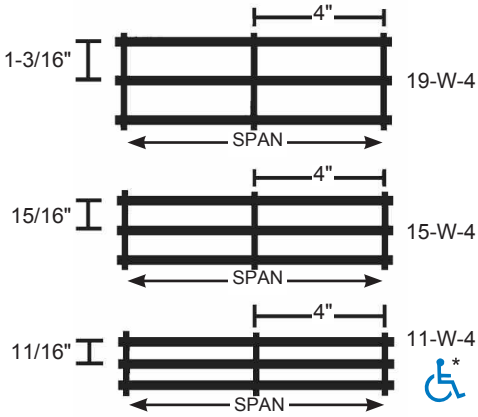

See load tables begining on page 45.

***Note:** Conforms with the spacing requirements of ADA (September 2010) when installed with the elongated opening perpendicular to the dominant direction of travel. See ADA Guidelines

LIGHT DUTY STEEL DOVE TAIL

DT SERIES

Traditionally designed, Dove Tail slot pressure locked grating offers the high strength and stiffness of welded grating, along with the smooth, clean lines of a flush top rectangular cross bar. Bearing bars and cross bars are precision slotted, assembled in egg-crate fashion and hydraulically pressed together to form a tightly locked, rigidly stable panel grid. This grating is available in a wide variety of spacings including a 1/4" or 1/2" opening product, which conforms with provisions for the "Americans with Disabilities Act" (September 2010). These products are part of our Grater Access line and are available with cross bars on 2" or 4" centers. This is also a popular style in the architectural community because of the aesthetic eye appeal of the product and the ability to maintain tighter tolerances. This style is also available in stainless steel. OnGrip® Spray Traction Surface is also available.

Serrated surface also available.

****8 Space available upon request.***

GRATING PROFILES AVAILABLE...

DT SERIES Light Duty Steel Dove Tail

All profiles shown below are also available with 2" cross bar centers. Product numbers would be 19-DT-2, 15-DT-2, 11-DT-2 and 7-DT-2

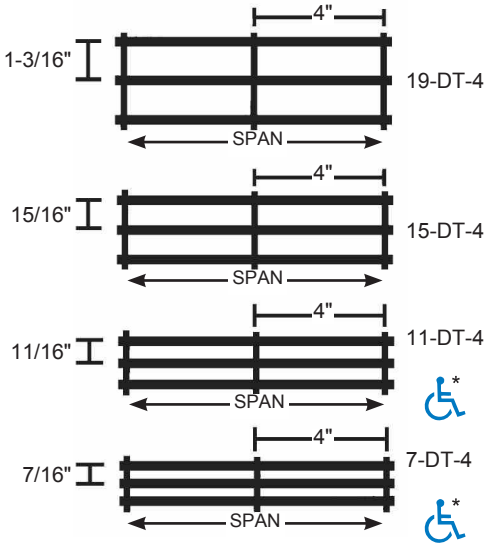

See load tables begining on page 45.

***Note:** Conforms with the spacing requirements of ADA (September 2010) when installed with the elongated opening perpendicular to the dominant direction of travel. See ADA Guidelines

LIGHT DUTY SWAGED CARBON STEEL

SGCS SERIES

The swaging process allows the assembly of bar grating panels by mechanically locking the cross bars at right angles to the bearing bars. It provides the clean crisp lines of a recessed cross bar and eliminates the jagged weld flash inherent with welded bar grating.Additionally, the heat generated as part of the electro-forging process, limits how close together the bars may be placed. By using the most modern technology available, swaged bar grating is available in a wide variety of spacings including a 1/4" or 1/2" opening product, which conforms with provisions for the "Americans with Disabilities Act" (September 2010). Because of its aesthetic appeal and the ability to meet tight tolerances, this product is often used for architectural applications.

OnGrip® Spray Traction Surface is also available.

8 Space available upon request.

GRATING PROFILES AVAILABLE...

SGCS SERIES Light Duty Swaged Carbon Steel

All profiles shown below are also available with 2" cross bar centers. Product numbers would be 19-SGCS-2, 15-SGCS-2, 11-SGCS-2 and 7-SGCS-2

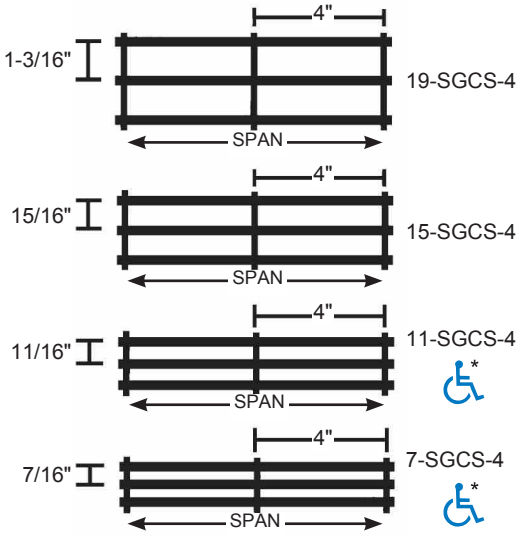

See load tables begining on page 45.

***Note:** Conforms with the spacing requirements of ADA (September 2010) when installed with the elongated opening perpendicular to the dominant direction of travel. See ADA Guidelines

STEEL **LIGHT DUTY WELDED**

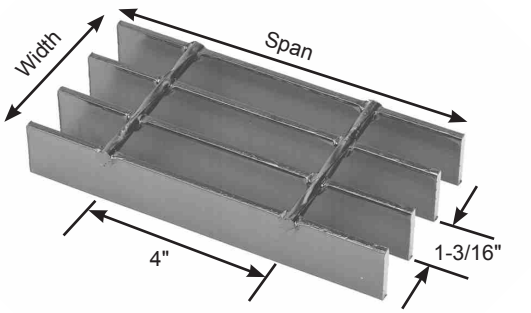

19-W-4

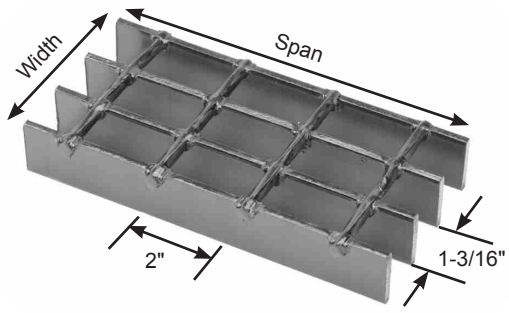

19-W-2

% Open Area*		
Bars	1/8"	3/16"
4" cc	83%	77%
2" cc	76%	71%

STEEL **LIGHT DUTY DOVE TAIL**

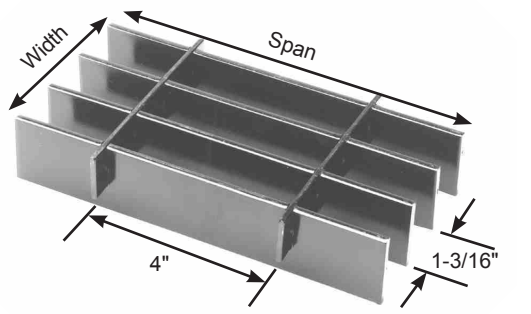

19-DT-4

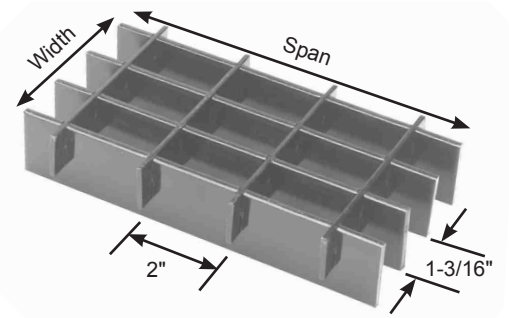

19-DT-2

% Open Area*		
Bars	1/8"	3/16"
4" cc	86%	81%
2" cc	84%	79%

STEEL **LIGHT DUTY SWAGED CARBON**

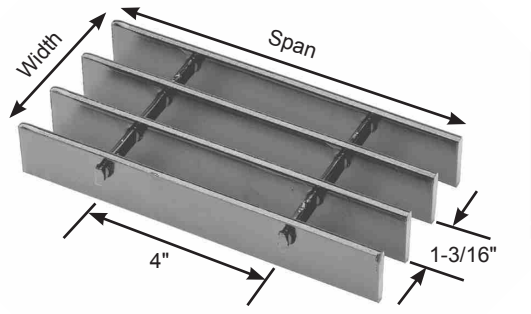

19-SGCS-4

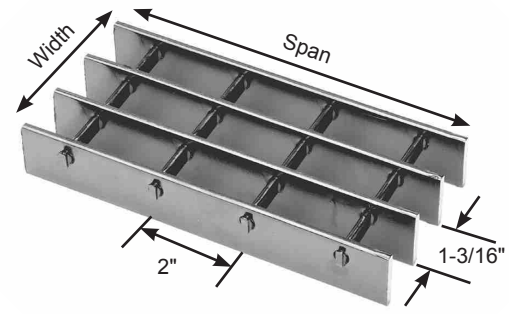

19-SGCS-2

% Open Area*		
Bars	1/8"	3/16"
4" cc	83%	78%
2" cc	76%	72%

Light Duty Welded, Light Duty Dove Tail & Light Duty Swaged Carbon Steel

Bar Size, Inches	Ped Span, Inches	Wt.* Lbs. Sq. Ft.	Sec. Prop Sx*, in³ / Ix*, in⁴		Clear Span 2'- 0"	2'- 6"	3'- 0"	3'- 6"	4'- 0"	4'- 6"	5'- 0"	5'- 6"	6'- 0"	6'- 6"	7'- 0"	8'- 0"
3/4 x 3/16	46	5.43	0.178	U	533	341	237	174	133							
				D	0.099	0.155	0.224	0.304	0.397							
			0.067	C	533	426	355	305	266							
				D	0.079	0.124	0.179	0.244	0.317							
1 x 1/8	51	4.88	0.211	U	632	404	281	206	158	125						
				D	0.075	0.116	0.168	0.228	0.298	0.378						
			0.105	C	632	505	421	361	316	281						
				D	0.060	0.093	0.134	0.183	0.239	0.302						
1 x 3/16	57	7.04	0.316	U	947	606	421	309	237	187	152					
				D	0.074	0.116	0.168	0.228	0.298	0.377	0.467					
			0.158	C	947	758	632	541	474	421	379					
				D	0.060	0.093	0.134	0.182	0.239	0.302	0.372					
1-1/4 x 1/8	61	5.96	0.329	U	987	632	439	322	247	195	158	130				
				D	0.060	0.093	0.134	0.182	0.239	0.302	0.373	0.449				
			0.206	C	987	789	658	564	493	439	395	359				
				D	0.048	0.074	0.107	0.146	0.191	0.242	0.298	0.361				
1-1/4 x 3/16	67	8.64	0.493	U	1480	947	658	483	370	292	237	196	164			
				D	0.060	0.093	0.134	0.182	0.238	0.301	0.373	0.451	0.535			
			0.308	C	1480	1184	987	846	740	658	592	538	493			
				D	0.048	0.074	0.107	0.146	0.191	0.241	0.298	0.360	0.429			
1-1/2 x 1/8	70	7.04	0.474	U	1421	909	632	464	355	281	227	188	158			
				D	0.050	0.078	0.112	0.152	0.198	0.252	0.310	0.376	0.447			
			0.355	C	1421	1137	947	812	711	632	568	517	474			
				D	0.040	0.062	0.089	0.122	0.159	0.201	0.248	0.301	0.358			
1-1/2 x 3/16	77	10.25	0.711	U	2132	1364	947	696	533	421	341	282	237	202		
				D	0.050	0.078	0.112	0.152	0.199	0.251	0.310	0.376	0.447	0.525		
			0.533	C	2132	1705	1421	1218	1066	947	853	775	711	656		
				D	0.040	0.062	0.089	0.122	0.159	0.201	0.248	0.300	0.358	0.420		
1-3/4 x 3/16	87	11.87	0.967	U	2901	1857	1289	947	725	573	464	384	322	275	237	181
				D	0.043	0.067	0.096	0.130	0.170	0.215	0.266	0.322	0.383	0.450	0.522	0.680
			0.846	C	2901	2321	1934	1658	1451	1289	1160	1055	967	893	829	725
				D	0.034	0.053	0.077	0.104	0.136	0.172	0.213	0.257	0.306	0.360	0.417	0.545
2 x 3/16	96	13.48	1.263	U	3789	2425	1684	1237	947	749	606	501	421	359	309	237
				D	0.037	0.058	0.084	0.114	0.149	0.189	0.233	0.282	0.335	0.394	0.456	0.596
			1.263	C	3789	3032	2526	2165	1895	1684	1516	1378	1263	1166	1083	947
				D	0.030	0.047	0.067	0.091	0.119	0.151	0.186	0.225	0.268	0.315	0.365	0.477
2-1/4 x 3/16	105	15.08	1.599	U	4796	3069	2132	1566	1199	947	767	634	533	454	392	300
				D	0.033	0.052	0.074	0.101	0.132	0.168	0.207	0.250	0.298	0.350	0.406	0.530
			1.798	C	4796	3837	3197	2741	2398	2132	1918	1744	1599	1476	1370	1199
				D	0.026	0.041	0.060	0.081	0.106	0.134	0.165	0.200	0.238	0.280	0.324	0.424
2-1/2 x 3/16	113	16.70	1.974	U	5921	3789	2632	1933	1480	1170	947	783	658	561	483	370
				D	0.030	0.047	0.067	0.091	0.119	0.151	0.186	0.225	0.268	0.315	0.365	0.477
			2.467	C	5921	4737	3947	3383	2960	2632	2368	2153	1974	1822	1692	1480
				D	0.024	0.037	0.054	0.073	0.095	0.121	0.149	0.180	0.215	0.252	0.292	0.381

U - Safe uniform load in pounds/sq. ft.
C - Safe concentrated load in pounds/ft. grating width
D - Deflection in inches

Loads and deflections given in this table are theoretical, and based on a unit stress of 18,000 psi.

*Based on 10.105 bars/ft. of grating width. Bearing bars 1-3/16" c.c. Add .6 lbs./sq. ft. for 19-SGCS-2. **Note:** Grating for spans to the left of the heavy line have a deflection less than 1/4" for uniform loads of 100 lbs./sq. ft. This is the maximum deflection to afford pedestrian comfort and can be exceeded for other types of load at the discretion of the engineer. The actual Ped (pedestrian) Span under this condition is shown above for each size of grating. When serrated grating is specified, the depth of grating required for a specific load will be 1/4" greater than that shown in these tables. **3/4" x 3/16" serrated grating is not available.**

Panel Width Chart (in.) - 19-W-4, 19-W-2, 19-DT-4, 19-DT-2, 19-SGCS-4 & 19-SGCS-2

Dimensions Are Out-to-Out of Bearing Bars**

No. of Bars	2	3	4	5	6	7	8	9	10	11	12	13	14	15	16
3/16" Bars	1-3/8	2-9/16	3-3/4	4-15/16	6-1/8	7-5/16	8-1/2	9-11/16	10-7/8	12-1/16	13-1/4	14-7/16	15-5/8	16-13/16	18
No. of Bars	17	18	19	20	21	22	23	24	25	26	27	28	29	30	31
3/16" Bars	19-3/16	20-3/8	21-9/16	22-3/4	23-15/16	25-1/8	26-5/16	27-1/2	28-11/16	29-7/8	31-1/16	32-1/4	33-7/16	34-5/8	35-13/16

**Add 1/4" for extended cross bars. Deduct 1/16" for 1/8" bearing bars. Standard panel widths indicated in blue.

STEEL **LIGHT DUTY WELDED**

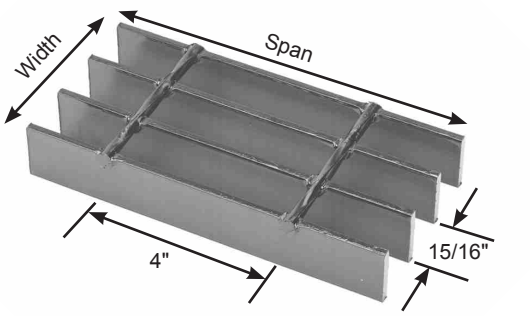

15-W-4

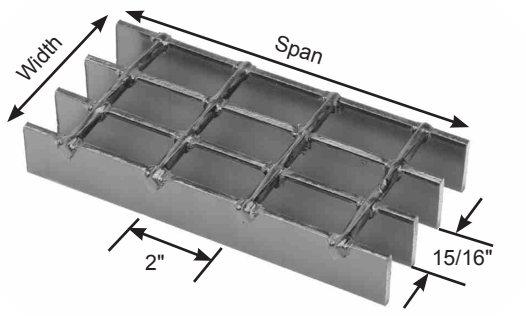

15-W-2

% Open Area*	
4" cc	73%
2" cc	67%

STEEL **LIGHT DUTY DOVE TAIL**

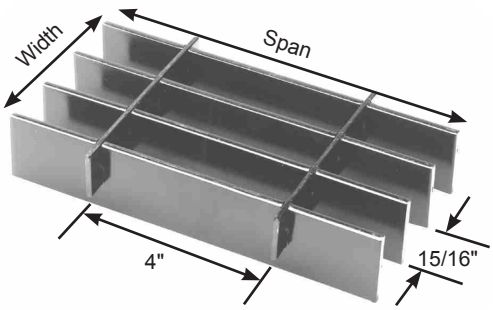

15-DT-4

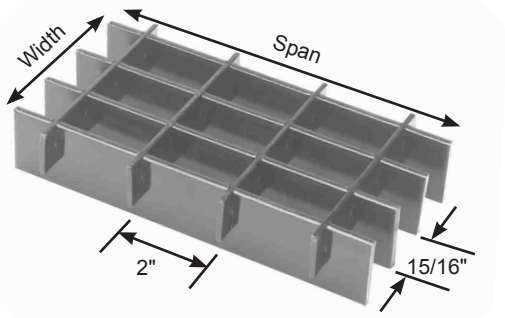

15-DT-2

% Open Area*	
4" cc	77%
2" cc	75%

STEEL **LIGHT DUTY SWAGED CARBON**

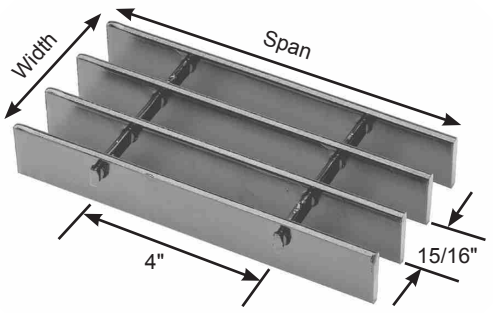

15-SGCS-4

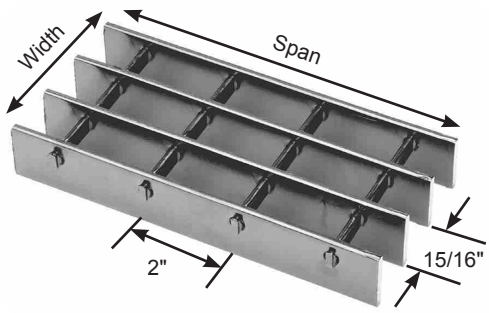

15-SGCS-2

% Open Area*	
4" cc	74%
2" cc	68%

Light Duty Welded, Light Duty Dove Tail & Light Duty Swaged Carbon Steel

Bar Size, Inches	Ped Span, Inches	Wt. Lbs. Sq. Ft.	Sec. Prop Sx*, in³ / Ix*, in⁴		Clear Span 2'- 0"	2'- 6"	3'- 0"	3'- 6"	4'- 0"	4'- 6"	5'- 0"	5'- 6"	6'- 0"	6'- 6"	7'- 0"	8'- 0"
3/4 x 3/16	49	7.11	0.225	U	675	432	300	220	169	133						
				D	0.099	0.155	0.223	0.304	0.398	0.502						
			0.084	C	675	540	450	386	338	300						
				D	0.079	0.124	0.179	0.243	0.318	0.402						
1 x 3/16	60	9.27	0.400	U	1200	768	533	392	300	237	192	159				
				D	0.074	0.116	0.167	0.228	0.298	0.377	0.466	0.564				
			0.200	C	1200	960	800	686	600	533	480	436				
				D	0.060	0.093	0.134	0.183	0.238	0.301	0.372	0.450				
1-1/4 x 3/16	71	11.43	0.625	U	1875	1200	833	612	469	370	300	248	208			
				D	0.060	0.093	0.134	0.182	0.238	0.301	0.372	0.451	0.535			
			0.391	C	1875	1500	1250	1071	938	833	750	682	625			
				D	0.048	0.074	0.107	0.146	0.191	0.241	0.298	0.361	0.429			
1-1/2 x 3/16	82	13.82	0.900	U	2700	1728	1200	882	675	533	432	357	300	256	220	
				D	0.050	0.078	0.112	0.152	0.199	0.251	0.310	0.375	0.447	0.525	0.607	
			0.675	C	2700	2160	1800	1543	1350	1200	1080	982	900	831	771	
				D	0.040	0.062	0.089	0.122	0.159	0.201	0.248	0.300	0.358	0.420	0.486	
1-3/4 x 3/16	92	15.98	1.225	U	3675	2352	1633	1200	919	726	588	486	408	348	300	230
				D	0.043	0.067	0.096	0.130	0.170	0.215	0.266	0.322	0.383	0.450	0.521	0.682
			1.072	C	3675	2940	2450	2100	1838	1633	1470	1336	1225	1131	1050	919
				D	0.034	0.053	0.077	0.104	0.136	0.172	0.213	0.257	0.306	0.360	0.417	0.545
2 x 3/16	102	18.14	1.600	U	4800	3072	2133	1567	1200	948	768	635	533	454	392	300
				D	0.037	0.058	0.084	0.114	0.149	0.189	0.233	0.282	0.335	0.393	0.456	0.596
			1.600	C	4800	3840	3200	2743	2400	2133	1920	1745	1600	1477	1371	1200
				D	0.030	0.047	0.067	0.091	0.119	0.151	0.186	0.225	0.268	0.315	0.365	0.477
2-1/4 x 3/16	111	20.16	2.025	U	6075	3888	2700	1984	1519	1200	972	803	675	575	496	380
				D	0.033	0.052	0.074	0.101	0.132	0.168	0.207	0.250	0.298	0.350	0.406	0.530
			2.278	C	6075	4860	4050	3471	3038	2700	2430	2209	2025	1869	1736	1519
				D	0.026	0.041	0.060	0.081	0.106	0.134	0.166	0.200	0.238	0.280	0.324	0.424
2-1/2 x 3/16	120	22.32	2.500	U	7500	4800	3333	2449	1875	1481	1200	992	833	710	612	469
				D	0.030	0.047	0.067	0.091	0.119	0.151	0.186	0.225	0.268	0.315	0.365	0.477
			3.125	C	7500	6000	5000	4286	3750	3333	3000	2727	2500	2308	2143	1875
				D	0.024	0.037	0.054	0.073	0.095	0.121	0.149	0.180	0.215	0.252	0.292	0.381

U - Safe uniform load in pounds/sq. ft.
C - Safe concentrated load in pounds/ft. grating width
D - Deflection in inches

Loads and deflections given in this table are theoretical, and are based on a unit stress of 18,000 psi.

*Based on 12.8 bars/ft. of grating width. Bearing bars 15/16" c.c. Add .8 lbs./sq. ft. for 15-W-2. 1/8" bearing bars available by inquiry. **Note:** Grating for spans to the left of the heavy line have a deflection less than 1/4" for uniform loads of 100 lbs./sq. ft. This is the maximum deflection to afford pedestrian comfort and can be exceeded for other types of load at the discretion of the engineer. The actual Ped (pedestrian) Span under this condition is shown above for each size of grating. When serrated grating is specified, the depth of grating required for a specific load will be 1/4" greater than that shown in these tables. **3/4" x 3/16" serrated grating is not available.**

Panel Width Chart (in.) - 15-W-4, 15-W-2, 15-DT-4, 15-DT-2, 15-SGCS-4 & 15-SGCS-2

Dimensions Are Out-to-Out of Bearing Bars**

No. of Bars	2	3	4	5	6	7	8	9	10	11	12	13	14	15	16
3/16" Bars	1-1/8	2-1/16	3	3-15/16	4-7/8	5-13/16	6-3/4	7-11/16	8-5/8	9-9/16	10-1/2	11-7/16	12-3/8	13-5/16	14-1/4
No. of Bars	17	18	19	20	21	22	23	24	25	26	27	28	29	30	31
3/16" Bars	15-3/16	16-1/8	17-1/16	18	18-15/16	19-7/8	20-13/16	21-3/4	22-11/16	23-5/8	24-9/16	25-1/2	26-7/16	27-3/8	28-5/16
No. of Bars	32	33	34	35	36	37	38	39							
3/16" Bars	29-1/4	30-3/16	31-1/8	32-1/16	33	33-15/16	34-7/8	35-13/16							

**Add 1/4" for extended cross bars. Deduct 1/16" for 1/8" bearing bars. Standard panel widths indicated in blue.

STEEL **LIGHT DUTY WELDED**

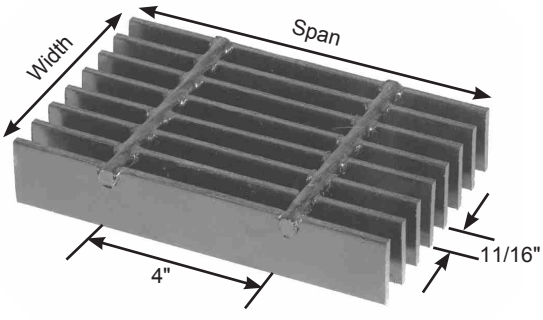

11-W-4

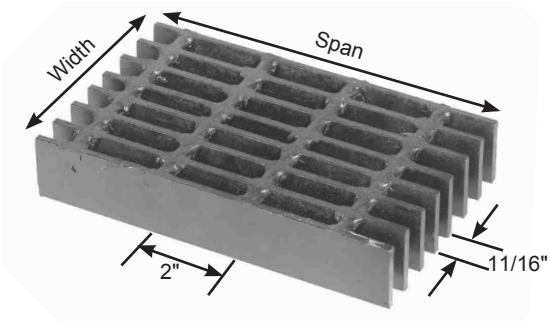

11-W-2

% Open Area*	
4" cc	66%
2" cc	57%

STEEL **LIGHT DUTY DOVE TAIL**

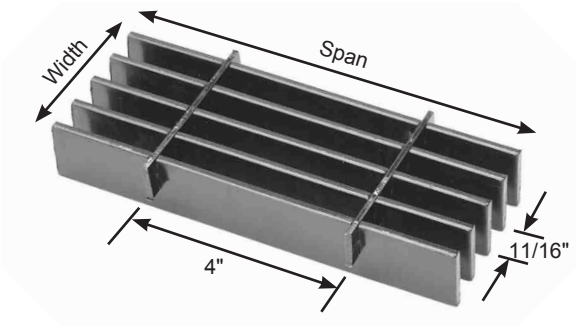

11-DT-4

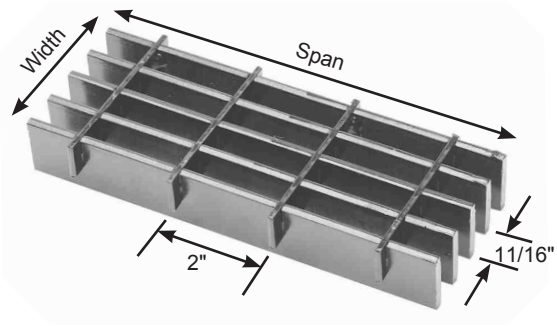

11-DT-2

% Open Area*	
4" cc	70%
2" cc	68%

STEEL **LIGHT DUTY SWAGED CARBON**

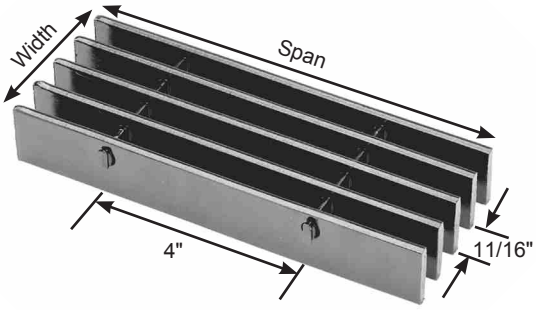

11-SGCS-4

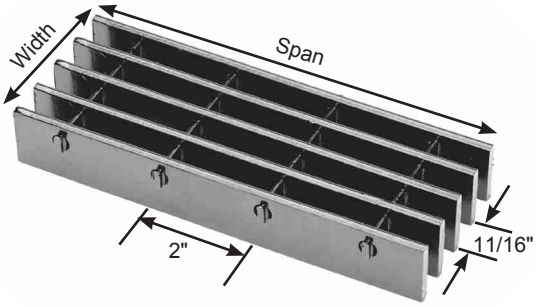

11-SGCS-2

% Open Area*	
4" cc	67%
2" cc	62%

Light Duty Welded, Light Duty Dove Tail & Light Duty Swaged Carbon Steel

Bar Size, Inches	Ped Span, Inches	Wt. Lbs. Sq. Ft.	Sec. Prop Sx*, in³ / Ix*, in⁴		ClearSpan 2'- 0"	2'- 6"	3'- 0"	3'- 6"	4'- 0"	4'- 6"	5'- 0"	5'- 6"	6'- 0"	6'- 6"	7'- 0"	8'- 0"
3/4 x 3/16	53	9.28	0.307	U	920	589	409	301	230	182						
				D	0.099	0.155	0.223	0.305	0.397	0.503						
			0.115	C	920	736	614	526	460	409						
				D	0.079	0.124	0.179	0.243	0.318	0.402						
1 x 3/16	65	12.16	0.545	U	1636	1047	727	534	409	323	262	216				
				D	0.074	0.116	0.168	0.228	0.298	0.377	0.466	0.562				
			0.273	C	1636	1309	1091	935	818	727	655	595				
				D	0.060	0.093	0.134	0.182	0.238	0.302	0.373	0.451				
1-1/4 x 3/16	77	15.04	0.852	U	2557	1636	1136	835	639	505	409	338	284	242		
				D	0.060	0.093	0.134	0.183	0.238	0.302	0.372	0.450	0.536	0.629		
			0.533	C	2557	2046	1705	1461	1278	1136	1023	930	852	787		
				D	0.048	0.075	0.107	0.146	0.191	0.241	0.298	0.361	0.429	0.504		
1-1/2 x 3/16	89	18.28	1.227	U	3682	2356	1636	1202	920	727	589	487	409	349	301	230
				D	0.050	0.078	0.112	0.152	0.199	0.251	0.310	0.376	0.447	0.525	0.609	0.794
			0.920	C	3682	2946	2455	2104	1841	1636	1473	1339	1227	1133	1052	920
				D	0.040	0.062	0.089	0.122	0.159	0.201	0.248	0.300	0.357	0.420	0.487	0.635
1-3/4 x 3/16	99	21.16	1.670	U	5011	3207	2227	1636	1253	990	802	663	557	474	409	313
				D	0.043	0.066	0.096	0.130	0.170	0.215	0.266	0.322	0.383	0.449	0.521	0.681
			1.462	C	5011	4009	3341	2864	2506	2227	2005	1822	1670	1542	1432	1253
				D	0.034	0.053	0.077	0.104	0.136	0.172	0.213	0.257	0.306	0.360	0.417	0.545
2 x 3/16	110	24.04	2.182	U	6546	4189	2909	2137	1636	1293	1047	866	727	620	534	409
				D	0.037	0.058	0.084	0.114	0.149	0.189	0.233	0.282	0.335	0.394	0.456	0.596
			2.182	C	6546	5237	4364	3740	3273	2909	2618	2380	2182	2014	1870	1636
				D	0.030	0.047	0.067	0.091	0.119	0.151	0.186	0.225	0.268	0.315	0.365	0.477
2-1/4 x 3/16	120	26.74	2.761	U	8284	5302	3682	2705	2071	1636	1325	1095	920	784	676	518
				D	0.033	0.052	0.074	0.101	0.132	0.168	0.207	0.250	0.298	0.350	0.405	0.530
			3.107	C	8284	6627	5523	4734	4142	3682	3314	3012	2761	2549	2367	2071
				D	0.026	0.041	0.060	0.081	0.106	0.134	0.166	0.200	0.238	0.280	0.324	0.424
2-1/2 x 3/16	130	29.62	3.409	U	10228	6546	4546	3340	2557	2020	1636	1352	1136	968	835	639
				D	0.030	0.047	0.067	0.091	0.119	0.151	0.186	0.225	0.268	0.315	0.365	0.477
			4.261	C	10228	8182	6818	5844	5114	4546	4091	3719	3409	3147	2922	2557
				D	0.024	0.037	0.054	0.073	0.095	0.121	0.149	0.180	0.214	0.252	0.292	0.381

U - Safe uniform load in pounds/sq. ft.
C - Safe concentrated load in pounds/ft. grating width
D - Deflection in inches

% Open Area*	
4" cc	66%
2" cc	57%

Loads and deflections are theoretical and based on a unit stress of 18,000 psi.

*Based on 17.455 bars/ft. of grating width. Bearing bars 11/16" c.c. Add .8 lbs./sq. ft. for 11-W-2. 1/8" bearing bars available by inquiry. **Note:** Grating for spans to the left of the heavy line have a deflection less than 1/4" for uniform loads of 100 lbs./sq. ft. This is the maximum deflection to afford pedestrian comfort and can be exceeded for other types of load at the discretion of the engineer. The actual Ped (pedestrian) Span under this condition is shown above for each size of grating. When serrated grating is specified, the depth of grating required for a specific load will be 1/4" greater than that shown in these tables. **3/4" x 3/16" serrated grating is not available.**

Panel Width Chart (in.) - 11-W-4 & 11-W-2 Dimensions Are Out-to-Out of Bearing Bars**

No. of Bars	2	3	4	5	6	7	8	9	10	11	12	13	14	15	16
3/16" Bars	7/8	1-9/16	2-1/4	2-15/16	3-5/8	4-5/16	5	5-11/16	6-3/8	7-1/16	7-3/4	8-7/16	9-1/8	9-13/16	10-1/2
No. of Bars	17	18	19	20	21	22	23	24	25	26	27	28	29	30	31
3/16" Bars	11-3/16	11-7/8	12-9/16	13-1/4	13-15/16	14-5/8	15-5/16	16	16-11/16	17-3/8	18-1/16	18-3/4	19-7/16	20-1/8	20-13/16
No. of Bars	32	33	34	35											
3/16" Bars	21-1/2	22-3/16	22-7/8	23-9/16											

**Deduct 1/16" for 1/8" bearing bars. Standard panel widths indicated in blue.

Panel Width Chart (in.) - 11-SGCS-4, 11-SGCS-2, 11-DT-4 & 11-DT-2 Dimensions Are Out-to-Out of Bearing Bars**

No. of Bars	2	3	4	5	6	7	8	9	10	11	12	13	14	15	16
3/16" Bars	7/8	1-9/16	2-1/4	2-15/16	3-5/8	4-5/16	5	5-11/16	6-3/8	7-1/16	7-3/4	8-7/16	9-1/8	9-13/16	10-1/2
No. of Bars	17	18	19	20	21	22	23	24	25	26	27	28	29	30	31
3/16" Bars	11-3/16	11-7/8	12-9/16	13-1/4	13-15/16	14-5/8	15-5/16	16	16-11/16	17-3/8	18-1/16	18-3/4	19-7/16	20-1/8	20-13/16
No. of Bars	32	33	34	35	36	37	38	39	40	41	42	43	44	45	46
3/16" Bars	21-1/2	22-3/16	22-7/8	23-9/16	24-1/4	24-15/16	25-5/8	26-5/16	27	27-11/16	28-3/8	29-1/16	29-3/4	30-7/16	31-1/8
No. of Bars	47	48	49	50	51	52	53								
3/16" Bars	31-13/16	32-1/2	33-3/16	33-7/8	34-9/16	35-1/4	35-15/16								

**Add 1/4" for extended cross bars. Deduct 1/16" for 1/8" bearing bars. Standard panel widths indicated in blue.

STEEL **LIGHT DUTY DOVE TAIL**

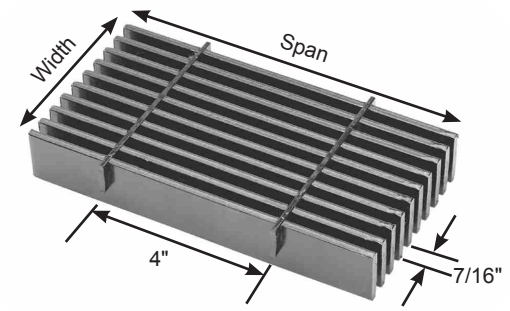

7-DT-4

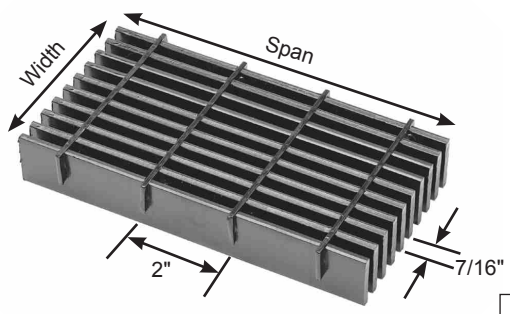

7-DT-2

% Open Area*	
4" cc	55%
2" cc	53%

STEEL **LIGHT DUTY SWAGED CARBON**

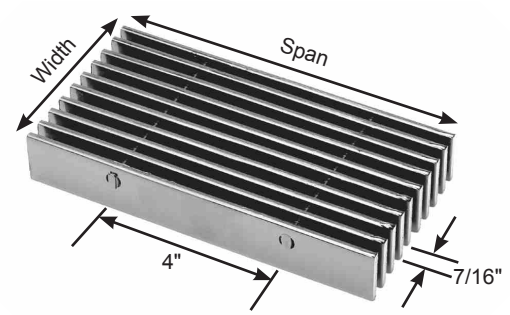

7-SGCS-4

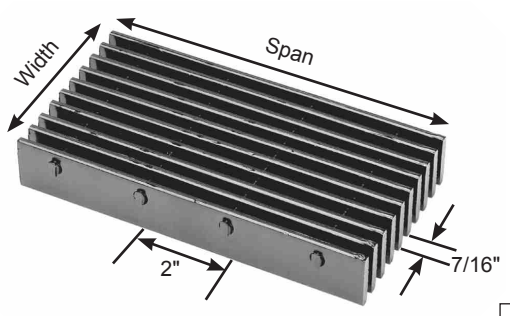

7-SGCS-2

% Open Area*	
4" cc	52%
2" cc	48%

Light Duty Dove Tail & Light Duty Swaged Carbon Steel

Bar Size, Inches	Ped Span, Inches	Wt.* Lbs. Sq. Ft.	Sec.Prop Sx*, in³ / Ix*, in⁴		ClearSpan 2'- 0"	2'- 6"	3'- 0"	3'- 6"	4'- 0"	4'- 6"	5'- 0"	5'- 6"	6'- 0"	6'- 6"	7'- 0"	8'- 0"
3/4 x 3/16	59	13.73	0.482	U	1446	926	643	472	362	286	231					
				D	0.099	0.155	0.223	0.304	0.398	0.503	0.620					
			0.181	C	1446	1157	964	827	723	643	579					
				D	0.079	0.124	0.179	0.243	0.318	0.402	0.497					
1 x 3/16	73	18.09	0.857	U	2571	1646	1143	840	643	508	411	340	286			
				D	0.074	0.116	0.168	0.228	0.298	0.377	0.465	0.563	0.671			
			0.429	C	2571	2057	1714	1469	1286	1143	1029	935	857			
				D	0.060	0.093	0.134	0.182	0.238	0.302	0.373	0.451	0.536			
1-1/4 x 3/16	86	22.45	1.339	U	4018	2571	1786	1312	1004	794	643	531	446	380	328	251
				D	0.060	0.093	0.134	0.182	0.238	0.302	0.372	0.450	0.536	0.629	0.730	0.953
			0.837	C	4018	3214	2679	2296	2009	1786	1607	1461	1339	1236	1148	1004
				D	0.048	0.074	0.107	0.146	0.191	0.241	0.298	0.360	0.429	0.503	0.584	0.762
1-1/2 x 3/16	99	26.81	1.929	U	5786	3703	2571	1889	1446	1143	926	765	643	548	472	362
				D	0.050	0.078	0.112	0.152	0.199	0.251	0.310	0.375	0.447	0.525	0.608	0.795
			1.446	C	5786	4629	3857	3306	2893	2571	2314	2104	1929	1780	1653	1446
				D	0.040	0.062	0.089	0.122	0.159	0.201	0.248	0.300	0.358	0.420	0.487	0.635
1-3/4 x 3/16	111	31.20	2.625	U	7875	5040	3500	2571	1969	1556	1260	1041	875	746	643	492
				D	0.043	0.067	0.096	0.130	0.170	0.216	0.266	0.322	0.383	0.450	0.521	0.681
			2.297	C	7875	6300	5250	4500	3938	3500	3150	2864	2625	2423	2250	1969
				D	0.034	0.053	0.077	0.104	0.136	0.172	0.213	0.258	0.306	0.360	0.417	0.545
2 x 3/16	123	35.59	3.429	U	10286	6583	4572	3359	2571	2032	1646	1360	1143	974	840	643
				D	0.037	0.058	0.084	0.114	0.149	0.189	0.233	0.282	0.335	0.393	0.456	0.596
			3.429	C	10286	8229	6857	5878	5143	4572	4114	3740	3429	3165	2939	2571
				D	0.030	0.047	0.067	0.091	0.119	0.151	0.186	0.225	0.268	0.315	0.365	0.477
2-1/4 x 3/16	134	39.92	4.339	U	13018	8332	5786	4251	3255	2571	2083	1721	1446	1232	1063	814
				D	0.033	0.052	0.074	0.101	0.132	0.168	0.207	0.250	0.298	0.350	0.406	0.530
			4.882	C	13018	10414	8679	7439	6509	5786	5207	4734	4339	4006	3719	3255
				D	0.026	0.041	0.060	0.081	0.106	0.134	0.166	0.200	0.238	0.280	0.324	0.424
2-1/2 x 3/16	145	44.31	5.357	U	16072	10286	7143	5248	4018	3175	2571	2125	1786	1522	1312	1004
				D	0.030	0.047	0.067	0.091	0.119	0.151	0.186	0.225	0.268	0.315	0.365	0.476
			6.697	C	16072	12857	10714	9184	8036	7143	6429	5844	5357	4945	4592	4018
				D	0.024	0.037	0.054	0.073	0.095	0.121	0.149	0.180	0.215	0.252	0.292	0.381

U - Safe uniform load in pounds/sq. ft.
C - Safe concentrated load in pounds/ft.grating width
D - Deflection in inches
Loads and deflections are theoretical and based on a unit stress of 18,000 psi.

% Open Area*	
4" cc	52%
2" cc	48%

*Based on 27.429 bars/ft. of grating width. Bearing bars 7/16" c.c. Add .6 lbs./sq. ft. for 7-SGCS-2. 1/8" bearing bars available by inquiry. **Note:** Grating for spans to the left of the heavy line have a deflection less than 1/4" for uniform loads of 100 lbs./sq. ft. This is the maximum deflection to afford pedestrian comfort and can be exceeded for other types of load at the discretion of the engineer. The actual Ped (pedestrian) Span under this condition is shown above for each size of grating. When serrated grating is specified, the depth of grating required for a specific load will be 1/4" greater than that shown in these tables. **3/4" x 3/16" serrated grating is not available.**

Panel Width Chart (in.) - 7-SGCS-4, 7-SGCS-2, 7-DT-4 & 7-DT-2
Dimensions Are Out-to-Out of Bearing Bars**

No. of Bars	2	3	4	5	6	7	8	9	10	11	12	13	14	15	16
3/16" Bars	5/8	1-1/16	1-1/2	1-15/16	2-3/8	2-13/16	3-1/4	3-11/16	4-1/8	4-9/16	5	5-7/16	5-7/8	6-5/16	6-3/4
No. of Bars	17	18	19	20	21	22	23	24	25	26	27	28	29	30	31
3/16" Bars	7-3/16	7-5/8	8-1/16	8-1/2	8-15/16	9-3/8	9-13/16	10-1/4	10-11/16	11-1/8	11-9/16	12	12-7/16	12-7/8	13-5/16
No. of Bars	32	33	34	35	36	37	38	39	40	41	42	43	44	45	46
3/16" Bars	13-3/4	14-3/16	14-5/8	15-1/16	15-1/2	15-15/16	16-3/8	16-13/16	17-1/4	17-11/16	18-1/8	18-9/16	19	19-7/16	19-7/8
No. of Bars	47	48	49	50	51	52	53	54	55	56	57	58	59	60	61
3/16" Bars	20-5/16	20-3/4	21-3/16	21-5/8	22-1/16	22-1/2	22-15/16	23-3/8	23-13/16	24-1/4	24-11/16	25-1/8	25-9/16	26	26-7/16
No. of Bars	62	63	64	65	66	67	68	69	70	71	72	73	74	75	76
3/16" Bars	26-7/8	27-5/16	27-3/4	28-3/16	28-5/8	29-1/16	29-1/2	29-15/16	30-3/8	30-13/16	31-1/4	31-11/16	32-1/8	32-9/16	33
No. of Bars	77	78	79	80	81	82	83								
3/16" Bars	33-7/16	33-7/8	34-5/16	34-3/4	35-3/16	35-5/8	36-1/16								

**Add 1/4" for extended cross bars. Deduct 1/16" for 1/8" bearing bars. Standard panel widths indicated in blue.

LIGHT DUTY RIVETED STEEL

R SERIES

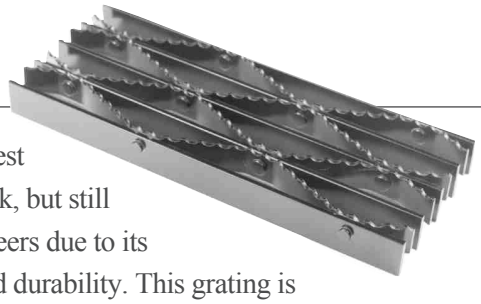

Riveted grating is the oldest style of industrial footwalk, but still the choice of many engineers due to its ruggedness, reliability and durability. This grating is composed of straight bearing bars, and bent connecting bars, which are joined at their contact points by rivets. Since the connecting bars extend continuously between bearing bars along the grating spans, they not only serve to join the bearing bars together, but also contribute to the load carrying capability and lateral stability of the grating panels. This added dimension makes riveted grating an ideal choice where high strength and stiffness are required. OnGrip® Spray Traction Surface is also available.

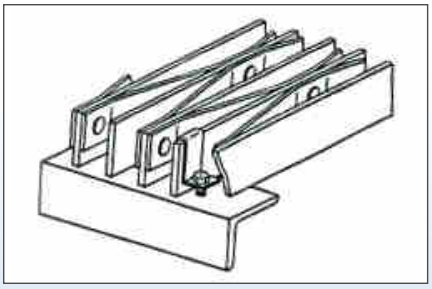

Z Clips manufactured from stainless steel. Available in 1", 1-1/2" and 2"

GRATING PROFILES AVAILABLE...

R SERIES Light Duty Riveted Steel

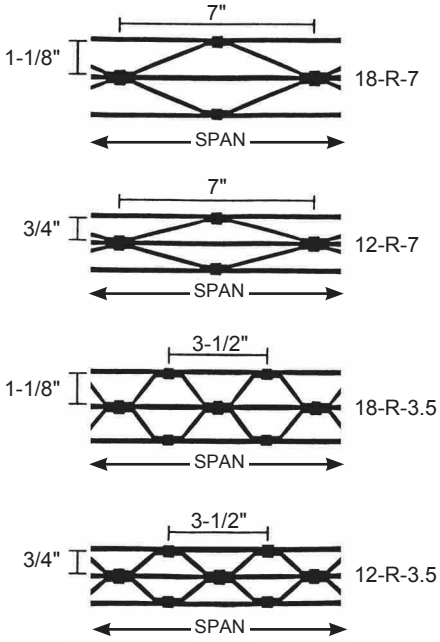

18-R-7 & 18-R-3-1/2

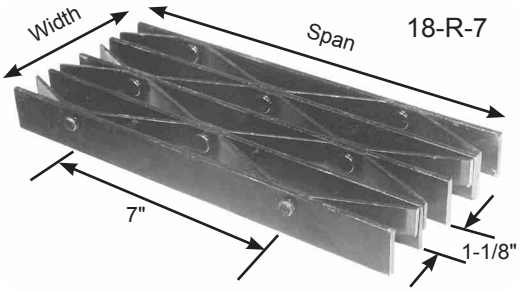

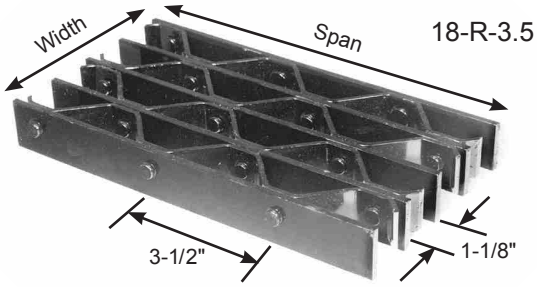

Bar Size, Inches	Ped Span, Inches	Wt. Lbs. Sq. Ft.	Sec. Prop Sx*, in³ / Ix*, in⁴		Clear Span 2'- 0"	2'- 6"	3'- 0"	3'- 6"	4'- 0"	4'- 6"	5'- 0"	5'- 6"	6'- 0"	6'- 6"	7'- 0"	8'- 0"
3/4 x 3/16	48	7.80	0.204	U	613	392	272	200	153	121						
				D	0.099	0.155	0.223	0.304	0.397	0.503						
			0.077	C	613	490	409	350	306	272						
				D	0.079	0.124	0.179	0.243	0.317	0.402						
1 x 1/8	53	7.60	0.242	U	726	465	323	237	182	143						
				D	0.074	0.116	0.168	0.228	0.299	0.376						
			0.121	C	726	581	484	415	363	323						
				D	0.060	0.093	0.134	0.182	0.238	0.302						
1 x 3/16	59	9.40	0.363	U	1089	697	484	356	272	215	174					
				D	0.074	0.116	0.168	0.228	0.298	0.377	0.465					
			0.182	C	1089	872	726	623	545	484	436					
				D	0.060	0.093	0.134	0.183	0.238	0.302	0.373					
1-1/4 x 1/8	63	8.70	0.378	U	1135	726	504	371	284	224	182	150				
				D	0.060	0.093	0.134	0.183	0.239	0.301	0.373	0.450				
			0.236	C	1135	908	757	648	567	504	454	413				
				D	0.048	0.074	0.107	0.146	0.191	0.241	0.298	0.361				
1-1/4 x 3/16	70	11.00	0.567	U	1702	1089	757	556	426	336	272	225	189			
				D	0.060	0.093	0.134	0.183	0.239	0.301	0.372	0.450	0.536			
			0.355	C	1702	1362	1135	973	851	757	681	619	567			
				D	0.048	0.074	0.107	0.146	0.191	0.241	0.298	0.360	0.429			
1-1/2 x 1/8	72	9.90	0.545	U	1634	1046	726	534	409	323	261	216	182	155		
				D	0.050	0.078	0.112	0.152	0.199	0.252	0.310	0.375	0.448	0.525		
			0.409	C	1634	1307	1089	934	817	726	654	594	545	503		
				D	0.040	0.062	0.089	0.122	0.159	0.201	0.248	0.300	0.358	0.420		
1-1/2 x 3/16	80	12.50	0.817	U	2451	1569	1089	800	613	484	392	324	272	232	200	
				D	0.050	0.078	0.112	0.152	0.199	0.251	0.310	0.375	0.446	0.524	0.608	
			0.613	C	2451	1961	1634	1401	1226	1089	981	891	817	754	700	
				D	0.040	0.062	0.089	0.122	0.159	0.201	0.248	0.300	0.357	0.419	0.486	
1-3/4 x 3/16	90	14.20	1.112	U	3336	2135	1483	1089	834	659	534	441	371	316	272	209
				D	0.043	0.066	0.096	0.130	0.170	0.215	0.266	0.322	0.383	0.450	0.521	0.683
			0.973	C	3336	2669	2224	1907	1668	1483	1335	1213	1112	1027	953	834
				D	0.034	0.053	0.077	0.104	0.136	0.172	0.213	0.257	0.306	0.360	0.417	0.545
2 x 3/16	99	16.80	1.453	U	4358	2789	1937	1423	1089	861	697	576	484	413	356	272
				D	0.037	0.058	0.084	0.114	0.149	0.189	0.233	0.282	0.335	0.394	0.457	0.595
			1.453	C	4358	3486	2905	2490	2179	1937	1743	1585	1453	1341	1245	1089
				D	0.030	0.047	0.067	0.091	0.119	0.151	0.186	0.225	0.268	0.315	0.365	0.476
2-1/4 x 3/16	108	18.30	1.838	U	5515	3530	2451	1801	1379	1089	882	729	613	522	450	345
				D	0.033	0.052	0.074	0.101	0.132	0.168	0.207	0.250	0.298	0.350	0.405	0.530
			2.068	C	5515	4412	3677	3152	2758	2451	2206	2006	1838	1697	1576	1379
				D	0.026	0.041	0.060	0.081	0.106	0.134	0.166	0.200	0.238	0.280	0.324	0.424
2-1/2 x 3/16	117	19.90	2.270	U	6809	4358	3026	2223	1702	1345	1089	900	757	645	556	426
				D	0.030	0.047	0.067	0.091	0.119	0.151	0.186	0.225	0.268	0.315	0.365	0.477
			2.837	C	6809	5447	4539	3891	3405	3026	2724	2476	2270	2095	1945	1702
				D	0.024	0.037	0.054	0.073	0.095	0.121	0.149	0.180	0.215	0.252	0.292	0.381

U - Safe uniform load in pounds/sq. ft.
C - Safe concentrated load in pounds/ft. grating width
D - Deflection in inches

Loads and deflections are theoretical and are based on a unit stress of 18,000 psi.

% Open Area*		
Bars	1/8"	3/16"
7" cc	78%	74%
3-1/2" cc	77%	73%

BB Size, Inches	CB Size, in. All Spacings
Thru 1-3/4	3/4 x 1/8
2 - 2-1/2	1 x 1/8

*Based on 11.621 bars/ft. of grating width. Bearing bars 1-1/8" face-to-face, connecting bars riveted 7" c.c. Add .4 lbs./sq. ft. for 18-R-3-1/2. **Note:** Grating for spans to the left of the heavy line have a deflection less than 1/4" for uniform loads of 100 lbs./sq. ft. This is the maximum deflection to afford pedestrian comfort and can be exceeded for other types of load at the discretion of the engineer. The actual Ped (pedestrian) Span under this condition is shown above for each size of grating.

Panel Width Chart (in.) - 18-R-7 & 18-R-3-1/2 Dimensions Are Out-to-Out of Bearing Bars**

No. of Bars	2	3	4	5	6	7	8	9	10	11	12	13	14	15	16
3/16" Bars	1-1/2	2-13/16	4-1/8	5-7/16	6-3/4	8-1/16	9-3/8	10-11/16	12	13-5/16	14-5/8	15-15/16	17-1/4	18-9/16	19-7/8
No. of Bars	17	18	19	20	21	22	23	24	25	26	27	28			
3/16" Bars	21-3/16	22-1/2	23-13/16	25-1/8	26-7/16	27-3/4	29-1/16	30-3/8	31-11/16	33	34-5/16	35-5/8			

**Add 1/4" for rivet heads. Deduct 1/16" for each 1/8" bearing bar. Standard panel widths indicated in blue.

12-R-7 & 12-R-3-1/2

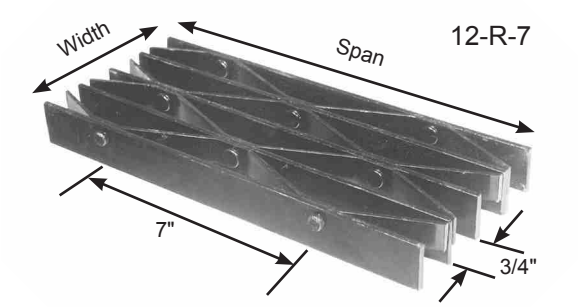

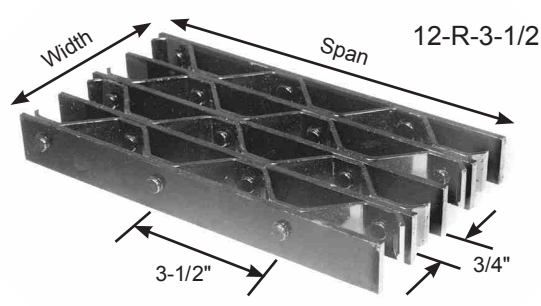

Bar Size, Inches	Ped Span, Inches	Wt. Lbs. Sq. Ft.	Sec. Prop Sx*, in³ / Ix*, in⁴		ClearSpan 2'- 0"	2'- 6"	3'- 0"	3'- 6"	4'- 0"	4'- 6"	5'- 0"	5'- 6"	6'- 0"	6'- 6"	7'- 0"	8'- 0"
3/4 x 3/16	52	10.70	0.286	U	858	549	381	280	214	169						
				D	0.099	0.155	0.223	0.304	0.396	0.501						
			0.107	C	858	686	572	490	429	381						
				D	0.079	0.124	0.179	0.243	0.318	0.402						
1 x 3/16	64	12.80	0.508	U	1525	976	678	498	381	301	244	202				
				D	0.074	0.116	0.168	0.228	0.298	0.377	0.465	0.564				
			0.254	C	1525	1220	1017	872	763	678	610	555				
				D	0.060	0.093	0.134	0.183	0.238	0.302	0.372	0.451				
1-1/4 x 3/16	76	15.00	0.794	U	2383	1525	1059	778	596	471	381	315	265	226		
				D	0.060	0.093	0.134	0.182	0.238	0.302	0.372	0.450	0.537	0.630		
			0.496	C	2383	1907	1589	1362	1192	1059	953	867	794	733		
				D	0.048	0.075	0.107	0.146	0.191	0.241	0.298	0.361	0.429	0.503		
1-1/2 x 3/16	87	17.10	1.144	U	3432	2196	1525	1121	858	678	549	454	381	325	280	214
				D	0.050	0.078	0.112	0.152	0.199	0.251	0.310	0.376	0.447	0.525	0.608	0.793
			0.858	C	3432	2745	2288	1961	1716	1525	1373	1248	1144	1056	980	858
				D	0.040	0.062	0.089	0.122	0.159	0.201	0.248	0.300	0.358	0.420	0.486	0.636
1-3/4 x 3/16	98	19.40	1.557	U	4671	2989	2076	1525	1168	923	747	618	519	442	381	292
				D	0.043	0.066	0.096	0.130	0.170	0.216	0.266	0.322	0.383	0.449	0.521	0.681
			1.362	C	4671	3737	3114	2669	2335	2076	1868	1699	1557	1437	1335	1168
				D	0.034	0.053	0.077	0.104	0.136	0.172	0.213	0.258	0.306	0.360	0.417	0.545
2 x 3/16	108	22.90	2.034	U	6101	3905	2712	1992	1525	1205	976	807	678	578	498	381
				D	0.037	0.058	0.084	0.114	0.149	0.189	0.233	0.282	0.335	0.394	0.456	0.595
			2.034	C	6101	4881	4067	3486	3050	2712	2440	2219	2034	1877	1743	1525
				D	0.030	0.047	0.067	0.091	0.119	0.151	0.186	0.225	0.268	0.315	0.365	0.477
2-1/4 x 3/16	118	25.00	2.574	U	7721	4942	3432	2521	1930	1525	1235	1021	858	731	630	483
				D	0.033	0.052	0.074	0.101	0.132	0.168	0.207	0.250	0.298	0.350	0.405	0.530
			2.896	C	7721	6177	5148	4412	3861	3432	3089	2808	2574	2376	2206	1930
				D	0.026	0.041	0.060	0.081	0.106	0.134	0.166	0.200	0.238	0.280	0.324	0.424
2-1/2 x 3/16	128	27.20	3.178	U	9533	6101	4237	3113	2383	1883	1525	1261	1059	902	778	596
				D	0.030	0.047	0.067	0.091	0.119	0.151	0.186	0.225	0.268	0.315	0.365	0.477
			3.972	C	9533	7626	6355	5447	4766	4237	3813	3466	3178	2933	2724	2383
				D	0.024	0.037	0.054	0.073	0.095	0.121	0.149	0.180	0.215	0.252	0.292	0.381

U - Safe uniform load in pounds/ sq.ft.
C - Safe concentrated load in pounds/ft. grating width
D - Deflection in inches

% Open Area	
Bars	3/16"
7" cc	65%
3-1/2" cc	64%

Loads and deflections are theoretical and are based on a unit stress of 18,000 psi.

*Based on 16.269 bars/ft. of grating width. Bearing bars 3/4" face-to-face, connecting bars riveted 7" c.c. Add .4 lbs./sq. ft. for 12-R-3-1/2. Note: Grating for spans to the left of the heavy line have a deflection less than 1/4" for uniform loads of 100 lbs./sq. ft. This is the maximum deflection to afford pedestrian comfort and can be exceeded for other types of load at the discretion of the engineer. The actual Ped (pedestrian) Span under this condition is shown above for each size of grating.

Panel Width Chart (in.) - 12-R-7 & 12-R-3-1/2 Dimensions Are Out-to-Out of Bearing Bars**

No. of Bars	2	3	4	5	6	7	8	9	10	11	12	13	14	15	16
3/16" Bars	1-1/8	2-1/16	3	3-15/16	4-7/8	5-13/16	6-3/4	7-11/16	8-5/8	9-9/16	10-1/2	11-7/16	12-3/8	13-5/16	14-1/4
No. of Bars	17	18	19	20	21	22	23	24	25	26	27	28	29	30	31
3/16" Bars	15-3/16	16-1/8	17-1/16	18	18-15/16	19-7/8	20-13/16	21-3/4	22-11/16	23-5/8	24-9/16	25-1/2	26-7/16	27-3/8	28-5/16
No. of Bars	32	33	34	35	36	37	38	39							
3/16" Bars	29-1/4	30-3/16	31-1/8	32-1/16	33	33-15/16	34-7/8	35-13/16							

**Add 1/4" for rivet heads. Deduct 1/16" for each 1/8" bearing bar. Standard panel widths indicated in blue.

LIGHT DUTY MBG PRESSLOCK

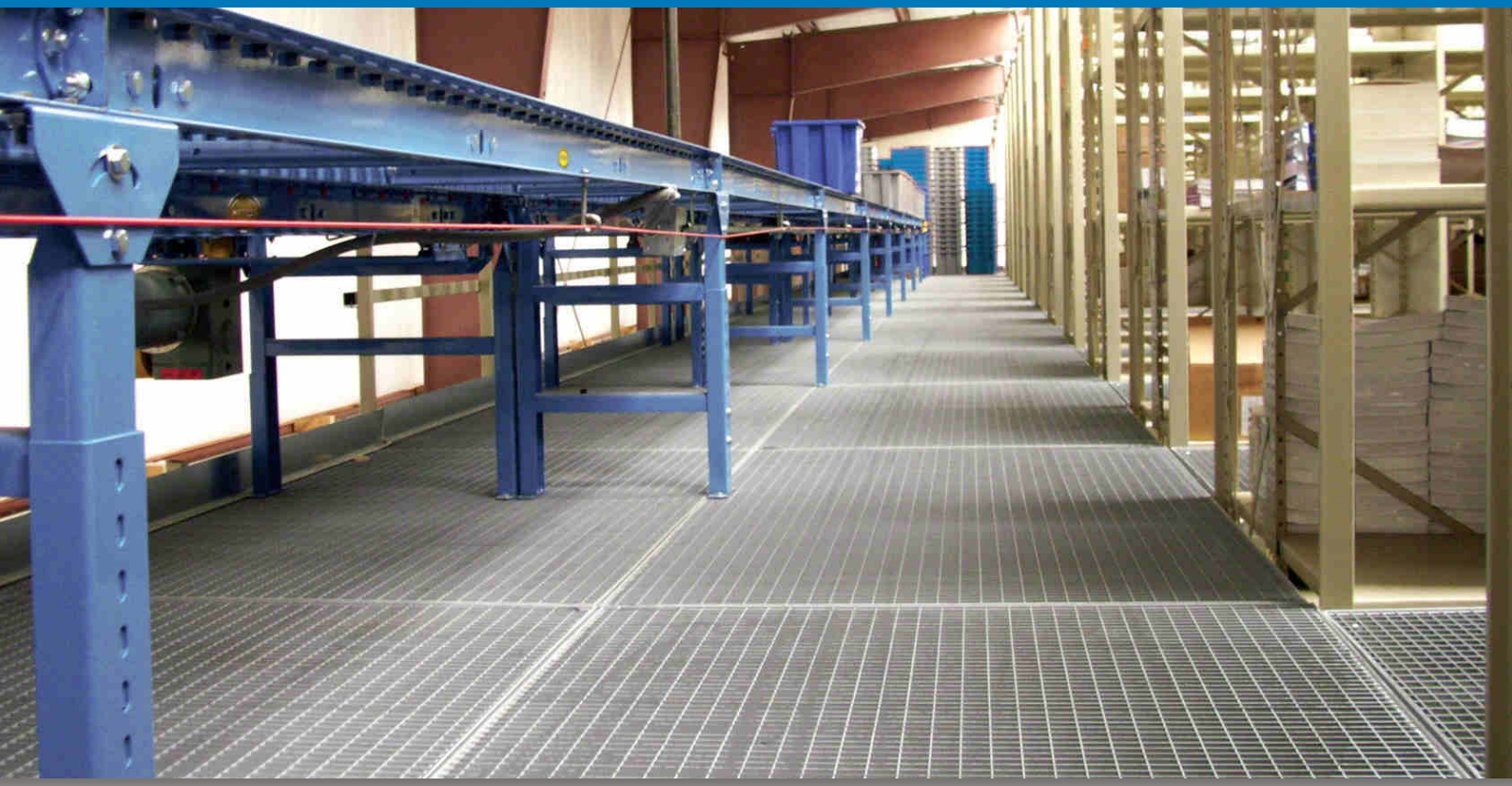

MBG PRESSLOCK

MBG PressLock is the perfect solution for mezzanine decking, pallet rack decking and shelving for the material handling market.

Within the manufacturing process, MBG PressLock grating offers flexibility to the end user based on the spacing and load requirements. Bar spacings are available in increments of 7/16" in either direction making it ideal for standard flooring applications as well as a multitude of architectural applications such as building facades, ADA walkways, fencing, sun screens, security barriers and handrail infill panels. The product is available in carbon steel and can be provided with various finishes including mill, galvanized and/or powder coated. OnGrip® Spray Traction Surface is also recommended for ADA Compliance.

GRATING PROFILES AVAILABLE...

MBG PRESSLOCK Light Duty Steel

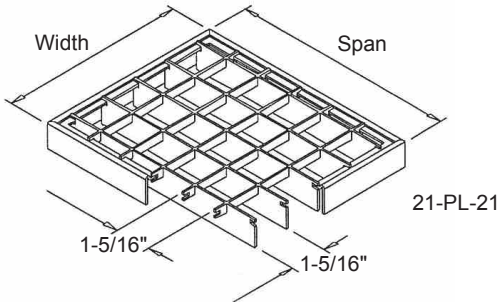

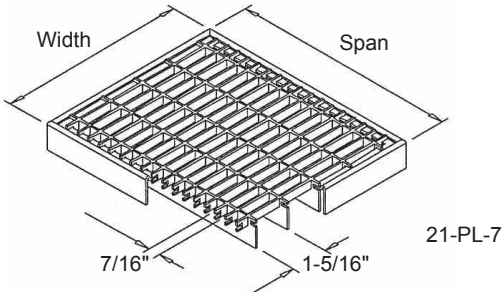

See load tables beginning on page 59.

LIGHT DUTY MBG PRESSLOCK

PRESSLOCK CONSTRUCTION

On our computer controlled production lines, the bearing bars are notched and then locked with the cross bar at very high pressure.

This particular production method guarantees a uniform precision mesh size.

The edge of MBG PressLock grating is banded either with a T-shaped special section or flat bar. This process (i.e. where the banding is welded at right angles to and flush with the grating surface) is done with automatic resistance welding.

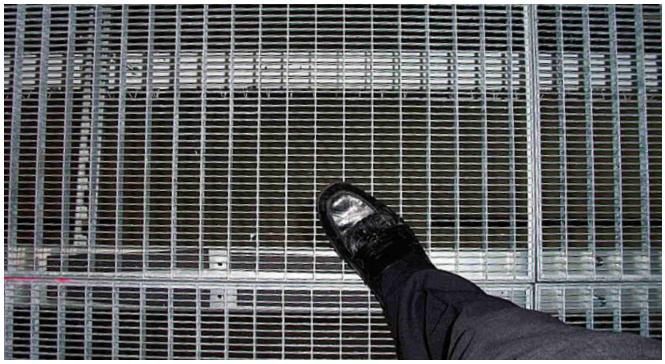

SPECIAL ORDER

Optimal maximum panel width: 72"

Maximum panel span:
In practice the length will be predetermined by statistical requirements and unit weights.

End meshing:
Panel width and span edges must be equal dimensions.

MBG PressLock...the Smart Choice

The cross bar is inserted in the notches of the bearing bar and press locked into a stable structure at a force of 500 tons.

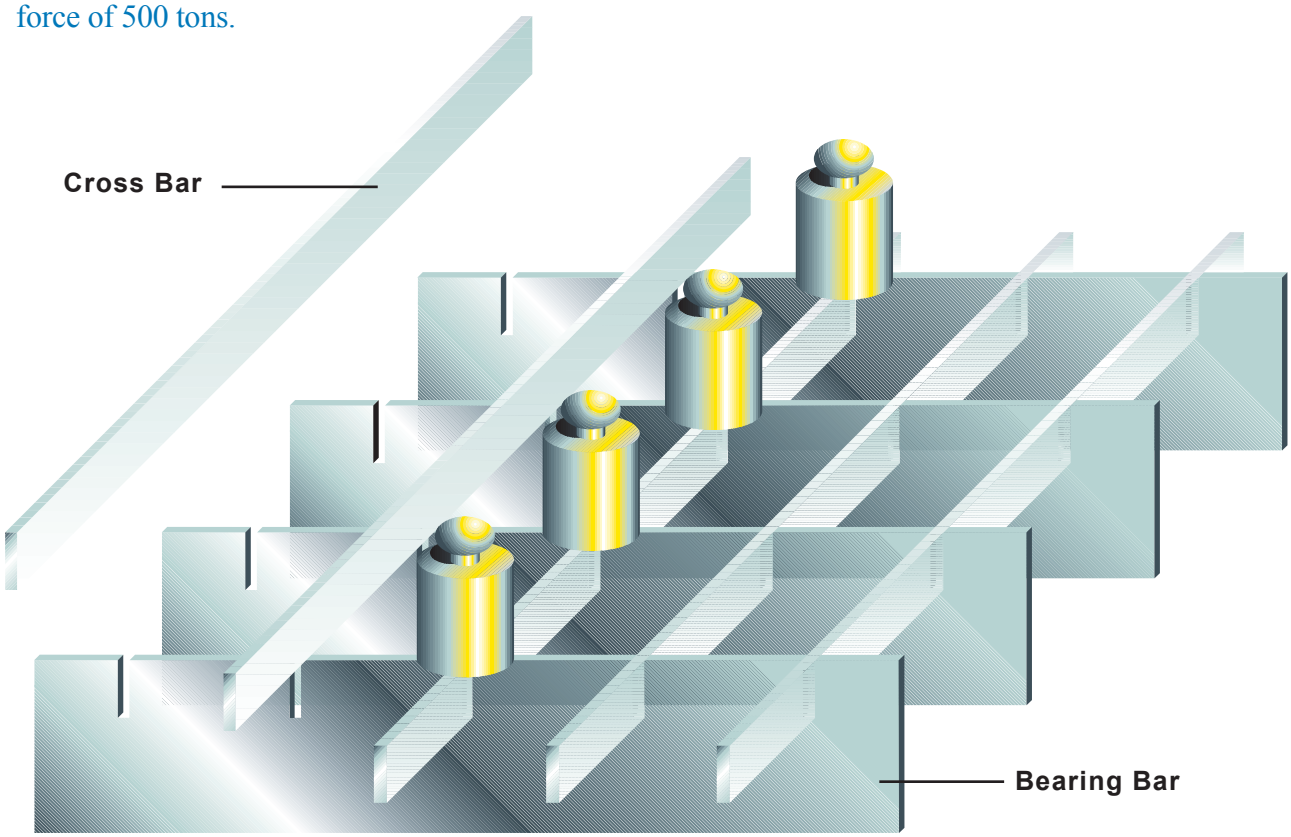

LIGHT DUTY MBG PRESSLOCK

TECHNICAL DATA

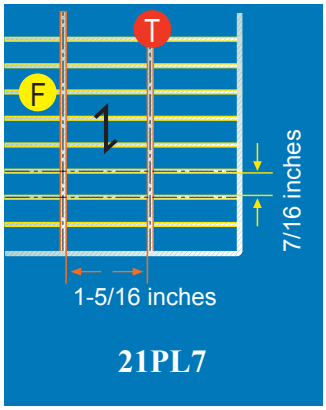

The Mesh Size on Press Lock Grating allows either bearing bars (T) or cross bars (F) to be spread in increments of 7⁄16". This provides a great deal of flexibility in design. The 21 PL7 is the designation for bearing bar spacing (21⁄16) and cross bar spacing (7⁄16).

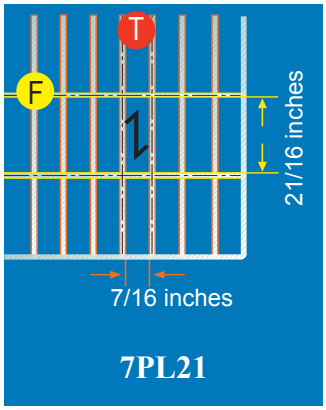

The 7PL21 is the designation for bearing bar spacing (7⁄16) and cross bar spacing (21⁄16).

Cross Bars

At right angles to the bearing bars, the cross bars connect the bearing bars with one another in that they are pressed at the intersection points.

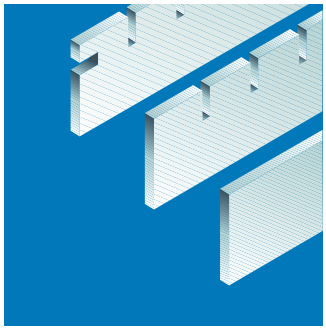

Bearing Bars

In parallel with one another, the bearing bars are the load carrying flat bars set out perpendicularly.

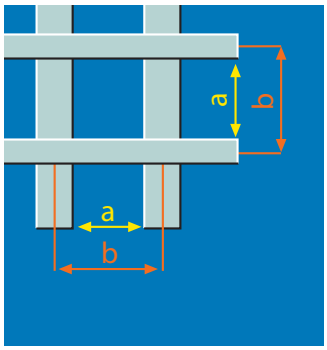

Mesh Spacing

Measurement from center to center (b) for the bearing bars and cross bars.

* Clear distance (a) between the bearing bar and the cross bar.

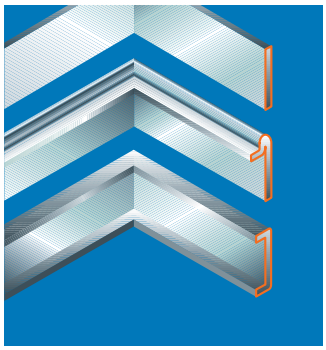

Banding Bars

Grating is usually banded all around by a flat bar, T-shaped section or U-shaped section.

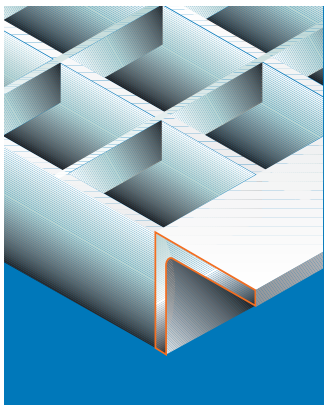

Angle Collar

Angles can be welded on to one or several edges. Angle height should be at least the same as the bearing bar.

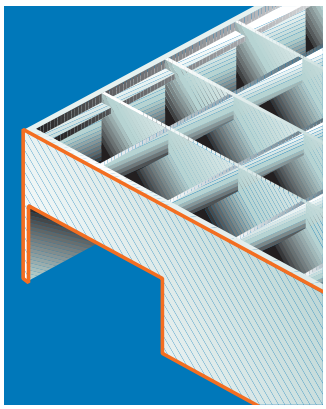

Notching

Special notching with extra-high banding in the shelving area.

LIGHT DUTY MBG PRESSLOCK

PROFILES

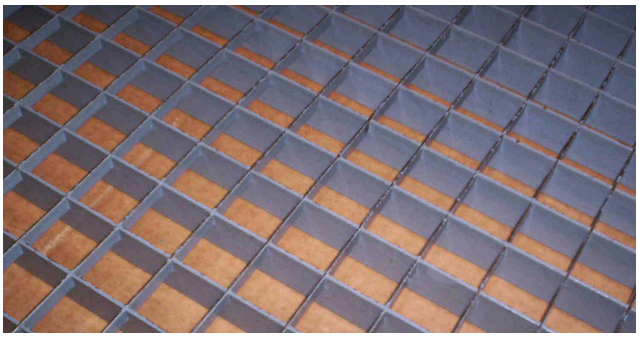

21PL21

Both the bearing bars and cross bars are spaced at 1-5/16" center to center. This spacing is appropriate when pushcarts & pallet jacks are not used on the mezzanines.

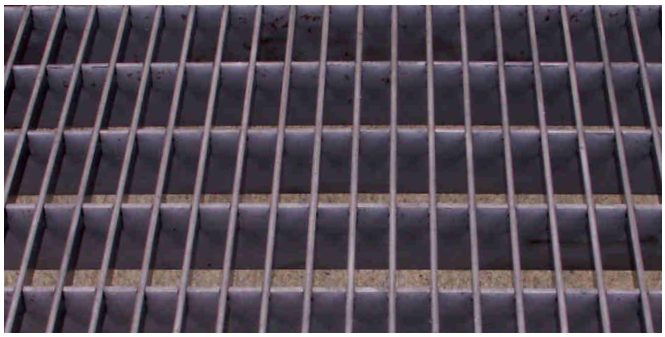

21PL7

This is the most popular spacing. (1-5/16" center to center on the bearing bars and 7/16" center to center on the cross bar). Ideal for carts & other rolling equipment.

FASTENERS

R Clips: A special formed metal fastener available in multiple sizes to fit any job.

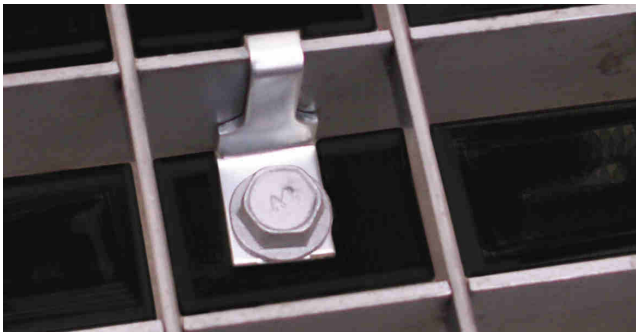

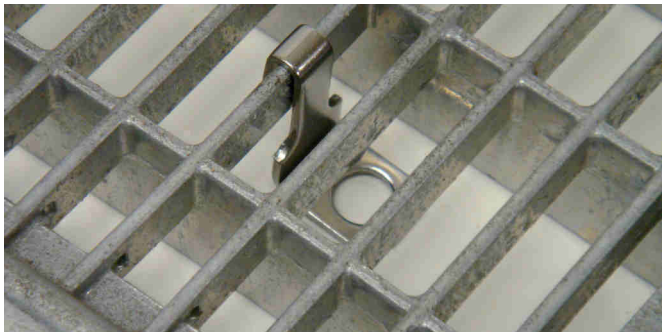

R Clip on **21PL21** PressLock available in sizes: 1", 1-3/16", 1-1/4", 1-3/8", 1-1/2", 1-5/8", 1-3/4" and 2".

STORAGE RACK DECKING & SHELVING

Decking

Manufactured from carbon steel with high load capacity for strength & stability to avoid deck failure like some wire deck products.

Shelving

PressLock Shelving has maximum shelf visibility for quick inventory checks and up to 84% open area allowing for air, light and maximum sprinkler performance in the event of a fire.

APPLICATIONS

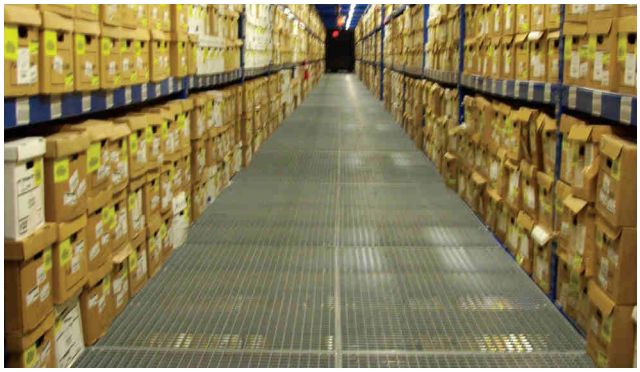

This load chart is based on our medium size bar thickness (12 gauge), and includes bar heights from 1" through 3". Loads are calculated on 21PL spacing for the bearing bar or 1-5/16 center to center. Weight based on mill finish 21PL21 spacing; if 21PL7 add 2.32 pounds/square foot.

PEDESTRIAN LOAD TABLE

Bar Size, Inches	Ped Span, Inches	Wt. Lbs. Sq. Ft.	Sec. Prop Sx*, in³ / Ix*, in⁴		ClearSpan											
					2'- 0"	2'- 6"	3'- 0"	3'- 6"	4'- 0"	4'- 6"	5'- 0"	5'- 6"	6'- 0"	6'- 6"	7'- 0"	8'- 0"
100M	40	4.31	0.1556	U	467	299	207	152	117	92	75	62	52	44	38	29
				D	0.074	0.1164	0.168	0.228	0.298	0.377	0.466	0.563	0.670	0.787	0.912	1.192
			0.0778	C	467	373	311	267	233	207	187	170	156	144	133	117
				D	0.060	0.093	0.134	0.182	0.238	0.302	0.372	0.451	0.536	0.629	0.730	0.953
118M	45	4.92	0.2167	U	650	416	289	212	162	128	104	86	72	62	53	41
				D	0.063	0.0986	0.142	0.193	0.252	0.320	0.395	0.477	0.568	0.667	0.773	1.010
			0.1278	C	650	520	433	371	325	289	260	236	217	200	186	162
				D	0.050	0.079	0.114	0.155	0.202	0.256	0.316	0.382	0.454	0.533	0.619	0.808
125M	47	5.16	0.2431	U	729	467	324	238	182	144	117	96	81	69	60	46
				D	0.060	0.0931	0.134	0.182	0.238	0.302	0.372	0.451	0.536	0.629	0.730	0.953
			0.1520	C	729	584	486	417	365	324	292	265	243	224	208	182
				D	0.048	0.074	0.107	0.146	0.191	0.241	0.298	0.360	0.429	0.504	0.584	0.763
138M	51	5.61	0.2963	U	889	569	395	290	222	176	142	118	99	84	73	56
				D	0.054	0.0843	0.121	0.165	0.216	0.273	0.337	0.408	0.486	0.570	0.661	0.864
			0.2045	C	889	711	593	508	444	395	356	323	296	274	254	222
				D	0.043	0.067	0.097	0.132	0.173	0.219	0.270	0.327	0.389	0.456	0.529	0.691
150M	54	6.02	0.3501	U	1050	672	467	343	263	207	168	139	117	99	86	66
				D	0.050	0.0776	0.112	0.152	0.199	0.251	0.310	0.376	0.447	0.524	0.608	0.794
			0.2626	C	1050	840	700	600	525	467	420	382	350	323	300	263
				D	0.040	0.062	0.089	0.122	0.159	0.201	0.248	0.300	0.358	0.420	0.487	0.636
158M	56	6.29	0.3884	U	1165	746	518	381	291	230	186	154	129	110	95	73
				D	0.047	0.0737	0.106	0.144	0.189	0.239	0.295	0.357	0.424	0.498	0.577	0.754
			0.3069	C	1165	932	777	666	583	518	466	424	388	359	333	291
				D	0.038	0.059	0.085	0.115	0.151	0.191	0.236	0.286	0.339	0.098	0.462	0.603
175M	61	6.88	0.4765	U	1430	915	635	467	357	282	229	189	159	135	117	89
				D	0.043	0.0665	0.096	0.130	0.170	0.215	0.266	0.322	0.383	0.450	0.521	0.681
			0.4170	C	1430	1144	953	817	715	635	572	520	477	440	408	357
				D	0.034	0.053	0.077	0.104	0.136	0.172	0.213	0.257	0.306	0.360	0.417	0.545
200M	67	7.73	0.6224	U	1867	1195	830	610	487	369	299	247	207	177	152	117
				D	0.037	0.0582	0.084	0.114	0.149	0.189	0.233	0.282	0.335	0.393	0.456	0.596
			0.6224	C	1867	1494	1245	1067	934	830	747	679	622	575	533	467
				D	0.030	0.047	0.067	0.091	0.119	0.151	0.186	0.225	0.268	0.315	0.365	0.477

*Calculations based on a uniform load of 100 pounds/square foot with maximum 1/8" deflection; figured per NAAMM standards
**For Galvanized add 7.5% to weight per square foot. 100M through 200M represents bearing bar height and thickness. Example: 100 = 1" high bar; 125 = 1-1/4"
***M (Medium) identifies bearing bar thickness of 12 gauge (.1046 in/2.66mm)

21-PL-21 & 21-PL-7

PROBLEM

1" x 1/8" 19W4 weld forge

SOLUTION

21PL7 - PressLock

This load chart is based on our standard size bar thickness (14 gauge), and includes bar heights from 1" through 2". Loads are calculated on 21PL spacing for the bearing bars or 1-5/16" center to center. Weight based on mill finish 21PL21 spacing; if 21PL7, add 1.93 pounds per square foot.

PEDESTRIAN LOAD TABLE

Bar Size, Inches	Ped Span, Inches	Wt. Lbs. Sq. Ft.	Sec. Prop Sx*, in³ / Ix*, in⁴		ClearSpan											
					2'- 0"	2'- 6"	3'- 0"	3'- 6"	4'- 0"	4'- 6"	5'- 0"	5'- 6"	6'- 0"	6'- 6"	7'- 0"	8'- 0"
100S	36	3.42	0.1098	U	330	211	146	108	82	65	53	44	37	31	27	21
				D	0.074	0.1164	0.168	0.228	0.298	0.377	0.466	0.563	0.670	0.787	0.912	1.192
			0.0549	C	330	264	220	188	165	146	132	120	110	101	94	82
				D	0.060	0.093	0.134	0.182	0.238	0.302	0.372	0.451	0.536	0.629	0.730	0.953
118S	41	3.87	0.1529	U	459	294	204	150	115	91	73	61	51	43	37	29
				D	0.063	0.0986	0.142	0.193	0.252	0.320	0.395	0.477	0.568	0.667	0.773	1.010
			0.0902	C	459	367	306	262	229	204	184	167	153	141	131	115
				D	0.050	0.079	0.114	0.155	0.202	0.256	0.316	0.382	0.454	0.533	0.619	0.808
125S	43	4.05	0.1716	U	515	330	229	168	129	102	82	68	57	49	42	32
				D	0.060	0.0931	0.134	0.182	0.238	0.302	0.372	0.451	0.536	0.629	0.730	0.953
			0.1073	C	515	412	343	294	257	229	206	187	172	158	147	129
				D	0.048	0.074	0.107	0.146	0.191	0.241	0.298	0.360	0.429	0.504	0.584	0.763
138S	46	4.38	0.2092	U	628	402	279	205	157	124	100	83	70	59	51	39
				D	0.054	0.0843	0.121	0.165	0.216	0.273	0.337	0.408	0.486	0.570	0.661	0.864
			0.1443	C	628	502	418	359	314	279	251	228	209	193	179	157
				D	0.043	0.067	0.097	0.132	0.173	0.219	0.270	0.327	0.389	0.456	0.529	0.691
150S	49	4.68	0.2471	U	741	474	330	242	185	146	119	98	82	70	61	46
				D	0.050	0.0776	0.112	0.152	0.199	0.251	0.310	0.376	0.447	0.524	0.608	0.794
			0.1854	C	741	593	494	424	371	330	297	270	247	228	212	185
				D	0.040	0.062	0.089	0.122	0.159	0.201	0.248	0.300	0.358	0.420	0.487	1.636
158S	51	4.89	0.2742	U	823	526	366	269	206	162	132	109	91	78	67	51
				D	0.047	0.0737	0.106	0.144	0.189	0.239	0.295	0.357	0.424	0.498	0.577	0.754
			0.2166	C	823	658	548	470	411	366	329	299	274	253	235	206
				D	0.038	0.059	0.085	0.115	0.151	0.191	0.236	0.285	0.339	0.398	0.462	0.603
175S	55	5.32	0.3364	U	1009	646	449	330	252	199	161	133	112	96	82	63
				D	0.043	0.0665	0.096	0.130	0.170	0.215	0.266	0.322	0.383	0.450	0.521	0.681
			0.2943	C	1009	807	673	577	505	449	404	367	336	311	288	252
				D	0.034	0.053	0.077	0.104	0.136	0.172	0.213	0.257	0.306	0.360	0.417	0.545
200S	61	5.95	0.4394	U	1318	844	586	430	330	260	211	174	146	125	108	82
				D	0.037	0.0582	0.084	0.114	0.149	0.189	0.233	0.282	0.335	0.393	0.456	0.596
			0.4394	C	1318	1054	879	753	659	586	527	479	439	406	377	330
				D	0.030	0.047	0.067	0.091	0.119	0.151	0.186	0.225	0.268	0.315	0.365	0.477

*Calculations based on a uniform load of 100 pounds/square foot with maximum 1/8" deflection; figured per NAAMM standards
**For Galvanized add 7.5% to weight per square foot. 100S through 200S represents bearing bar height and thickness. Example: 100 = 1" high bar; 125 = 1-1/4"
***S (Standard) identifies bearing bar thickness of 14 gauge (.0747 in/1.905mm)

SWAGED STAINLESS STEEL

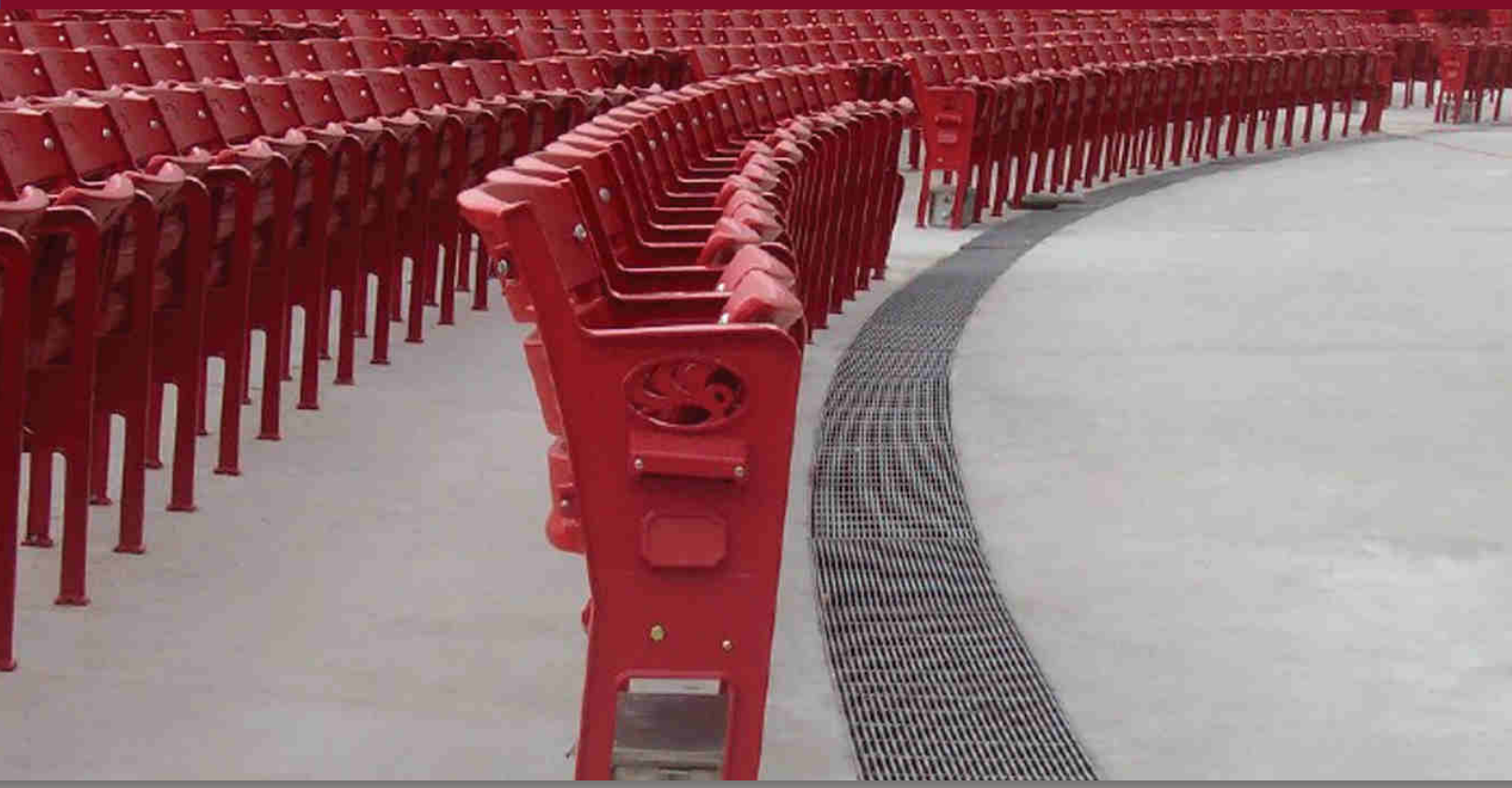

SGSS SERIES

The swaging process allows the assembly of bar grating panels by mechanically locking the cross bars at right angles to the bearing bars at a maximum of 4" on center. This process provides the clean crisp lines of a recessed cross bar and eliminates the discoloration inherent with welded bar grating. By using the most modern technology available, swaged bar grating allows for a variety of spacings including close spacings of 7/16" cc between bearing bars which have been approved by the "Americans with Disabilities Act".

Stainless steel grating has been the standard industrial footwalk product for severe corrosive environments and has been a popular grating choice for many years. Grating Systems fabricates stainless swaged bar grating from type 304 and 316 stainless steel bar. Stainless steel grating is used at chemical plants, food processing facilities, oil and gas producers and is also used in many other commercial and architectural applications.

OnGrip® Spray Traction Surface is also available.

GRATING PROFILES AVAILABLE...

SGSS SERIES Swaged Stainless Steel

All profiles shown below are also available with 2" cross bar centers. Product numbers would be 19-SGSS-2, 15-SGSS-2, 11-SGSS-2 and 7-SGSS-2

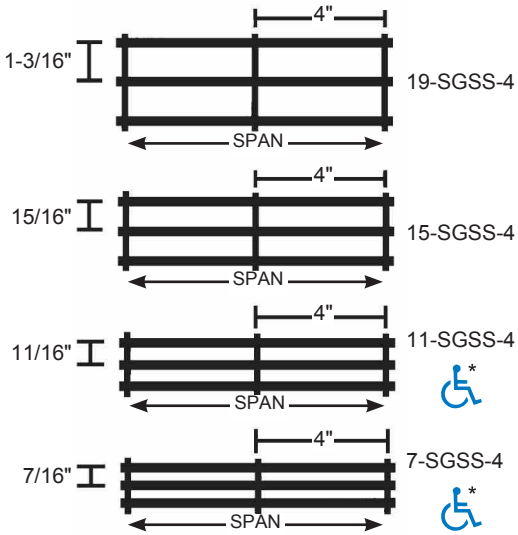

***Note:** Conforms with the spacing requirements of ADA (September 2010) when installed with the elongated opening perpendicular to the dominant direction of travel. See ADA Guidelines

19 SPACE

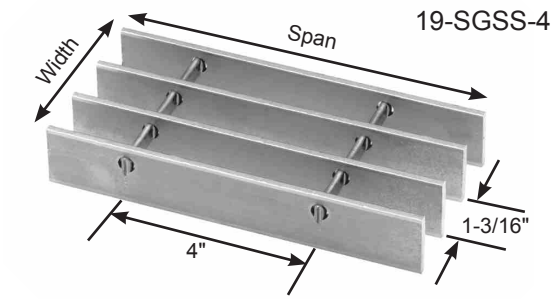

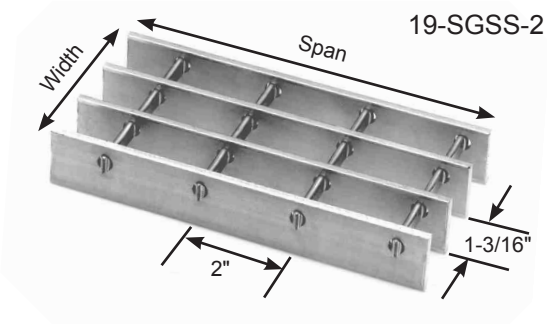

Bar Size, Inches	Ped Span, Inches	Wt.* Lbs. Sq. Ft.	Sec. Prop Sx*, in³ / Ix*, in⁴		ClearSpan 2'- 0"	2'- 6"	3'- 0"	3'- 6"	4'- 0"	4'- 6"	5'- 0"	5'- 6"	6'- 0"	6'- 6"	7'- 0"	8'- 0"
3/4 x 3/16	46	5.64	0.178	U	592	379	263	193	148							
				D	0.114	0.179	0.257	0.349	0.457							
			0.067	C	592	474	395	338	296							
				D	0.091	0.143	0.206	0.280	0.366							
1 x 1/8	51	4.99	0.211	U	702	449	312	229	175	139						
				D	0.086	0.134	0.193	0.262	0.342	0.435						
			0.105	C	702	561	468	401	351	312						
				D	0.069	0.107	0.154	0.210	0.274	0.347						
1 x 3/16	56	7.19	0.316	U	1053	674	468	344	263	208	168					
				D	0.086	0.134	0.193	0.263	0.343	0.434	0.534					
			0.158	C	1053	842	702	601	526	468	421					
				D	0.069	0.107	0.154	0.210	0.274	0.347	0.429					
1-1/4 x 1/8	60	6.09	0.329	U	1096	702	487	358	274	217	175	145				
				D	0.069	0.107	0.154	0.210	0.274	0.348	0.428	0.519				
			0.206	C	1096	877	731	627	548	487	439	399				
				D	0.055	0.086	0.123	0.168	0.219	0.278	0.343	0.415				
1-1/4 x 3/16	67	8.84	0.493	U	1645	1053	731	537	411	325	263	217	183			
				D	0.069	0.107	0.154	0.210	0.274	0.347	0.428	0.517	0.618			
			0.308	C	1645	1316	1096	940	822	731	658	598	548			
				D	0.055	0.086	0.123	0.168	0.219	0.278	0.343	0.415	0.494			
1-1/2 x 1/8	69	7.19	0.474	U	1579	1011	702	516	395	312	253	209	175			
				D	0.057	0.089	0.129	0.175	0.229	0.289	0.358	0.433	0.513			
			0.355	C	1579	1263	1053	902	789	702	632	574	526			
				D	0.046	0.071	0.103	0.140	0.183	0.232	0.286	0.346	0.411			
1-1/2 x 3/16	77	10.48	0.711	U	2368	1516	1053	773	592	468	379	313	263	224		
				D	0.057	0.089	0.129	0.175	0.229	0.289	0.357	0.432	0.514	0.603		
			0.533	C	2368	1895	1579	1353	1184	1053	947	861	789	729		
				D	0.046	0.071	0.103	0.140	0.183	0.232	0.286	0.346	0.411	0.483		
1-3/4 x 3/16	86	11.71	0.967	U	3224	2063	1433	1053	806	637	516	426	358	305	263	201
				D	0.049	0.077	0.110	0.150	0.196	0.248	0.306	0.370	0.441	0.517	0.600	0.782
			0.846	C	3224	2579	2149	1842	1612	1433	1289	1172	1075	992	921	806
				D	0.039	0.061	0.088	0.120	0.157	0.198	0.245	0.296	0.353	0.414	0.480	0.627
2 x 3/16	95	13.78	1.263	U	4210	2695	1871	1375	1053	832	674	557	468	399	344	263
				D	0.043	0.067	0.096	0.131	0.171	0.217	0.268	0.324	0.386	0.453	0.525	0.685
			1.263	C	4210	3368	2807	2406	2105	1871	1684	1531	1403	1296	1203	1053
				D	0.034	0.054	0.077	0.105	0.137	0.174	0.214	0.259	0.308	0.362	0.420	0.549
2-1/4 x 3/16	104	15.49	1.599	U	5329	3410	2368	1740	1332	1053	853	705	592	505	435	333
				D	0.038	0.060	0.086	0.117	0.152	0.193	0.238	0.288	0.343	0.403	0.467	0.609
			1.798	C	5329	4263	3553	3045	2664	2368	2132	1938	1776	1640	1523	1332
				D	0.030	0.048	0.069	0.093	0.122	0.154	0.191	0.231	0.274	0.322	0.373	0.488
2-1/2 x 3/16	112	17.08	1.974	U	6579	4210	2924	2148	1645	1300	1053	870	731	623	537	411
				D	0.034	0.054	0.077	0.105	0.137	0.174	0.214	0.259	0.309	0.362	0.420	0.548
			2.467	C	6579	5263	4386	3759	3289	2924	2632	2392	2193	2024	1880	1645
				D	0.027	0.043	0.062	0.084	0.110	0.139	0.171	0.207	0.247	0.290	0.336	0.439

U - Safe uniform load in pounds /sq.ft.
C - Safe concentrated load in pounds /ft. grating width
D - Deflection in inches

Loads and deflections are theoretical and based on a unit stress of 20,000 psi.

% Open Area*		
Bars	1/8"	3/16"
4" cc	83%	78%
2" cc	76%	72%

*Based on 10.105 bars/ft. of grating width. Bearing bars 1-3/16" c.c. Add .6 lbs./sq. ft. for 19-SGSS-2. **Note:** Grating for spans to the left of the heavy line have a deflection less than 1/4" for uniform loads of 100 lbs./sq. ft. This is the maximum deflection to afford pedestrian comfort and can be exceeded for other types of load at the discretion of the engineer. The actual Ped (pedestrian) Span under this condition is shown above for each size of grating. When serrated grating is specified, the depth of grating required for a specific load will be 1/4" greater than that shown in these tables. 3/4" x 3/16" serrated grating is not available.

Panel Width Chart (in.) - 19-SGSS-4 & 19-SGSS-2 Dimensions Are Out-to-Out of Bearing Bars**

No. of Bars	2	3	4	5	6	7	8	9	10	11	12	13	14	15	16
3/16" Bars	1-3/8	2-9/16	3-3/4	4-15/16	6-1/8	7-5/16	8-1/2	9-11/16	10-7/8	12-1/16	13-1/4	14-7/16	15-5/8	16-13/16	18
No. of Bars	17	18	19	20	21	22	23	24	25	26	27	28	29	30	31
3/16" Bars	19-3/16	20-3/8	21-9/16	22-3/4	23-15/16	25-1/8	26-5/16	27-1/2	28-11/16	29-7/8	31-1/16	32-1/4	33-7/16	34-5/8	35-13/16

**Add 1/4" for extended cross bars. Deduct 1/16" for 1/8" bearing bars. Standard panel widths indicated in red.

15 SPACE

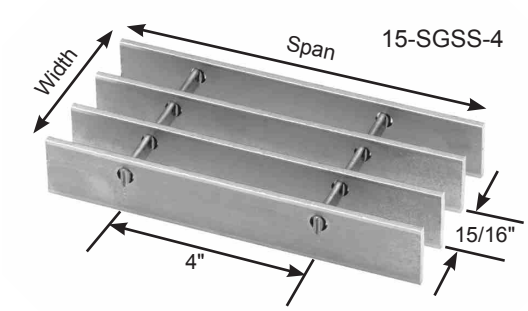

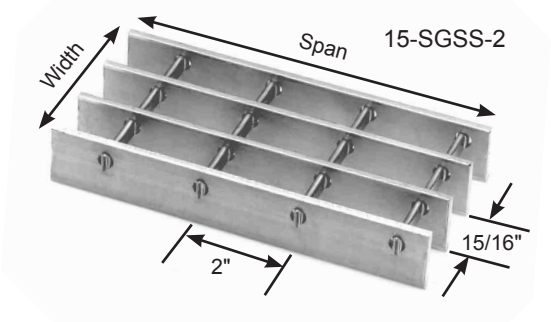

Bar Size, Inches	Ped Span, Inches	Wt.* Lbs. Sq. Ft.	Sec. Prop Sx*, in³ / Ix*, in⁴		ClearSpan 2'- 0"	2'- 6"	3'- 0"	3'- 6"	4'- 0"	4'- 6"	5'- 0"	5'- 6"	6'- 0"	6'- 6"	7'- 0"	8'- 0"
3/4 x 3/16	48	6.99	0.225	U	750	480	333	245	188	148						
				D	0.114	0.179	0.257	0.350	0.458	0.578						
			0.084	C	750	600	500	429	375	333						
				D	0.091	0.143	0.206	0.280	0.366	0.462						
1 x 3/16	60	8.95	0.400	U	1333	853	593	435	333	263	213	176				
				D	0.086	0.134	0.193	0.262	0.343	0.433	0.535	0.647				
			0.200	C	1333	1067	889	762	667	593	533	485				
				D	0.069	0.107	0.154	0.210	0.274	0.347	0.428	0.519				
1-1/4 x 3/16	71	11.03	0.625	U	2083	1333	926	680	521	412	333	275	231			
				D	0.069	0.107	0.154	0.210	0.274	0.348	0.428	0.518	0.616			
			0.391	C	2083	1667	1389	1190	1042	926	833	758	694			
				D	0.055	0.086	0.123	0.168	0.219	0.278	0.343	0.415	0.493			
1-1/2 x 3/16	81	13.12	0.900	U	3000	1920	1333	980	750	593	480	397	333	284	245	
				D	0.057	0.089	0.129	0.175	0.229	0.289	0.357	0.432	0.514	0.604	0.700	
			0.675	C	3000	2400	2000	1714	1500	1333	1200	1091	1000	923	857	
				D	0.046	0.071	0.103	0.140	0.183	0.231	0.286	0.346	0.411	0.483	0.560	
1-3/4 x 3/16	91	14.67	1.225	U	4083	2613	1815	1333	1021	807	653	540	454	387	333	255
				D	0.049	0.077	0.110	0.150	0.196	0.248	0.306	0.370	0.441	0.518	0.599	0.783
			1.072	C	4083	3267	2722	2333	2042	1815	1633	1485	1361	1256	1167	1021
				D	0.039	0.061	0.088	0.120	0.157	0.198	0.245	0.296	0.353	0.414	0.480	0.627
2 x 3/16	101	17.29	1.600	U	5333	3413	2370	1741	1333	1053	853	705	593	505	435	333
				D	0.043	0.067	0.096	0.131	0.171	0.217	0.268	0.324	0.386	0.453	0.525	0.685
			1.600	C	5333	4267	3556	3048	2667	2370	2133	1939	1778	1641	1524	1333
				D	0.034	0.054	0.077	0.105	0.137	0.174	0.214	0.259	0.309	0.362	0.420	0.548
2-1/4 x 3/16	110	19.47	2.025	U	6750	4320	3000	2204	1688	1333	1080	893	750	639	551	422
				D	0.038	0.060	0.086	0.117	0.152	0.193	0.238	0.288	0.343	0.402	0.467	0.610
			2.278	C	6750	5400	4500	3857	3375	3000	2700	2455	2250	2077	1929	1688
				D	0.030	0.048	0.069	0.093	0.122	0.154	0.190	0.231	0.274	0.322	0.373	0.488
2-1/2 x 3/16	119	21.48	2.500	U	8333	5333	3704	2721	2083	1646	1333	1102	926	789	680	521
				D	0.034	0.054	0.077	0.105	0.137	0.174	0.214	0.259	0.309	0.362	0.420	0.549
			3.125	C	8333	6667	5556	4762	4167	3704	3333	3030	2778	2564	2381	2083
				D	0.027	0.043	0.062	0.084	0.110	0.139	0.171	0.207	0.247	0.290	0.336	0.439

U - Safe uniform load in pounds /sq.ft.
C - Safe concentrated load in pounds /ft. grating width
D - Deflection in inches

Loads and deflections are theoretical and based on a unit stress of 20,000 psi.

% Open Area*		
Bars	1/8"	3/16"
4" cc	N/A	74%
2" cc	N/A	68%

*Based on 12.8 bars/ft. of grating width. Bearing bars 15/16" c.c. Add .6 lbs./sq. ft. for 15-SGSS-2. 1/8" bearing bars available by inquiry. **Note:** Grating for spans to the left of the heavy line have a deflection less than 1/4" for uniform loads of 100 lbs./sq. ft. This is the maximum deflection to afford pedestrian comfort and can be exceeded for other types of load at the discretion of the engineer. The actual Ped (pedestrian) Span under this condition is shown above for each size of grating. When serrated grating is specified, the depth of grating required for a specific load will be 1/4" greater than that shown in these tables. 3/4" x 3/16" serrated grating is not available.

Panel Width Chart (in.) - 15-SGSS-4 & 15-SGSS-2 — Dimensions Are Out-to-Out of Bearing Bars**

No. of Bars	2	3	4	5	6	7	8	9	10	11	12	13	14	15	16
3/16" Bars	1-1/8	2-1/16	3	3-15/16	4-7/8	5-13/16	6-3/4	7-11/16	8-5/8	9-9/16	10-1/2	11-7/16	12-3/8	13-5/16	14-1/4
No. of Bars	17	18	19	20	21	22	23	24	25	26	27	28	29	30	31
3/16" Bars	15-3/16	16-1/8	17-1/16	18	18-15/16	19-7/8	20-13/16	21-3/4	22-11/16	23-5/8	24-9/16	25-1/2	26-7/16	27-3/8	28-5/16
No. of Bars	32	33	34	35	36	37	38	39							
3/16" Bars	29-1/4	30-3/16	31-1/8	32-1/16	33	33-15/16	34-7/8	35-13/16							

**Add 1/4" for extended cross bars. Deduct 1/16" for 1/8" bearing bars. Standard panel widths indicated in red.

11 SPACE

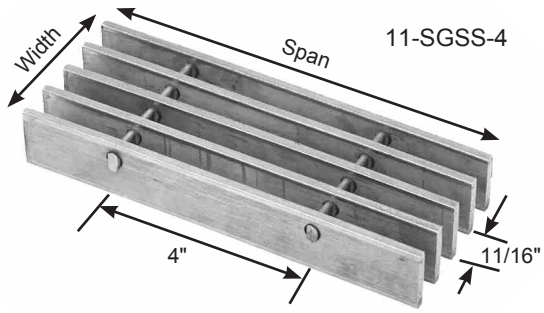

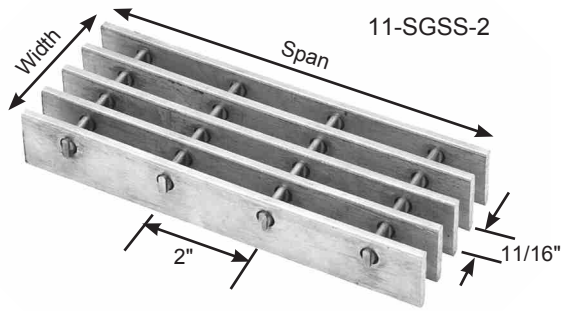

Bar Size, Inches	Ped Span, Inches	Wt.* Lbs. Sq. Ft.	Sec. Prop Sx*, in³ / Ix*, in⁴		ClearSpan 2'- 0"	2'- 6"	3'- 0"	3'- 6"	4'- 0"	4'- 6"	5'- 0"	5'- 6"	6'- 0"	6'- 6"	7'- 0"	8'- 0"
3/4 x 3/16	52	9.32	0.307	U	1023	655	455	334	256	202						
				D	0.114	0.179	0.257	0.350	0.458	0.578						
			0.115	C	1023	818	682	584	511	455						
				D	0.091	0.143	0.206	0.280	0.365	0.463						
1 x 3/16	65	11.99	0.545	U	1818	1164	808	594	455	359	291	240				
				D	0.086	0.134	0.193	0.263	0.343	0.434	0.536	0.647				
			0.273	C	1818	1455	1212	1039	909	808	727	661				
				D	0.069	0.107	0.154	0.210	0.274	0.347	0.428	0.518				
1-1/4 x 3/16	77	14.83	0.852	U	2841	1818	1263	928	710	561	455	376	316	269		
				D	0.069	0.107	0.154	0.210	0.274	0.347	0.429	0.519	0.618	0.724		
			0.533	C	2841	2273	1894	1623	1420	1263	1136	1033	947	874		
				D	0.055	0.086	0.123	0.168	0.219	0.278	0.343	0.415	0.494	0.579		
1-1/2 x 3/16	88	17.68	1.227	U	4091	2618	1818	1336	1023	808	655	541	455	387	334	256
				D	0.057	0.089	0.129	0.175	0.229	0.289	0.357	0.432	0.515	0.603	0.700	0.915
			0.920	C	4091	3273	2727	2338	2046	1818	1636	1488	1364	1259	1169	1023
				D	0.046	0.071	0.103	0.140	0.183	0.231	0.286	0.346	0.412	0.483	0.560	0.732
1-3/4 x 3/16	99	19.79	1.670	U	5568	3564	2475	1818	1392	1100	891	736	619	527	455	348
				D	0.049	0.077	0.110	0.150	0.196	0.248	0.306	0.370	0.441	0.517	0.601	0.784
			1.462	C	5568	4455	3712	3182	2784	2475	2227	2025	1856	1713	1591	1392
				D	0.039	0.061	0.088	0.120	0.157	0.198	0.245	0.296	0.353	0.414	0.480	0.627
2 x 3/16	109	23.37	2.182	U	7273	4655	3232	2375	1818	1437	1164	962	808	689	594	455
				D	0.043	0.067	0.096	0.131	0.171	0.217	0.268	0.324	0.386	0.453	0.525	0.686
			2.182	C	7273	5818	4849	4156	3636	3232	2909	2645	2424	2238	2078	1818
				D	0.034	0.054	0.077	0.105	0.137	0.174	0.214	0.259	0.309	0.362	0.420	0.549
2-1/4 x 3/16	119	26.34	2.761	U	9205	5891	4091	3006	2301	1818	1473	1217	1023	871	751	575
				D	0.038	0.060	0.086	0.117	0.152	0.193	0.238	0.288	0.343	0.402	0.466	0.609
			3.107	C	9205	7364	6137	5260	4602	4091	3682	3347	3068	2832	2630	2301
				D	0.030	0.048	0.069	0.093	0.122	0.154	0.190	0.230	0.274	0.322	0.373	0.488
2-1/2 x 3/16	129	29.08	3.409	U	11364	7273	5051	3711	2841	2245	1818	1503	1263	1076	928	710
				D	0.034	0.054	0.077	0.105	0.137	0.174	0.214	0.259	0.309	0.362	0.420	0.548
			4.261	C	11364	9091	7576	6494	5682	5051	4546	4132	3788	3497	3247	2841
				D	0.027	0.043	0.062	0.084	0.110	0.139	0.171	0.207	0.247	0.290	0.336	0.439

U - Safe uniform load in pounds/ sq.ft.
C - Safe concentrated load in pounds/ ft. grating width
D - Deflection in inches

% Open Area*		
Bars	1/8"	3/16"
4" cc	N/A	67%
2" cc	N/A	62%

Loads and deflections are theoretical and are based on a unit stress of 20,000 psi.

*Based on 17.455 bars/ft. of grating width. Bearing bars 11/16" c.c. Add .6 lbs./sq. ft. for 11-SGSS-2. 1/8" bearing bars available by inquiry. **Note:** Grating for spans to the left of the heavy line have a deflection less than 1/4" for uniform loads of 100 lbs./sq. ft. This is the maximum deflection to afford pedestrian comfort and can be exceeded for other types of load at the discretion of the engineer. The actual Ped (pedestrian) Span under this condition is shown above for each size of grating. When serrated grating is specified, the depth of grating required for a specific load will be 1/4" greater than that shown in these tables. 3/4" x 3/16" serrated grating is not available.

Panel Width Chart (in.) - 11-SGSS-4 & 11-SGSS-2 Dimensions Are Out-to-Out of Bearing Bars**

No. of Bars	2	3	4	5	6	7	8	9	10	11	12	13	14	15	16
3/16" Bars	7/8	1-9/16	2-1/4	2-15/16	3-5/8	4-5/16	5	5-11/16	6-3/8	7-1/16	7-3/4	8-7/16	9-1/8	9-13/16	10-1/2
No. of Bars	17	18	19	20	21	22	23	24	25	26	27	28	29	30	31
3/16" Bars	11-3/16	11-7/8	12-9/16	13-1/4	13-15/16	14-5/8	15-5/16	16	16-11/16	17-3/8	18-1/16	18-3/4	19-7/16	20-1/8	20-13/16
No. of Bars	32	33	34	35	36	37	38	39	40	41	42	43	44	45	46
3/16" Bars	21-1/2	22-3/16	22-7/8	23-9/16	24-1/4	24-15/16	25-5/8	26-5/16	27	27-11/16	28-3/8	29-1/16	29-3/4	30-7/16	31-1/8
No. of Bars	47	48	49	50	51	52	53								
3/16" Bars	31-13/16	32-1/2	33-3/16	33-7/8	34-9/16	35-1/4	35-15/16								

**Add 1/4" for extended cross bars. Deduct 1/16" for 1/8" bearing bars. Standard panel widths indicated in red.

7 SPACE

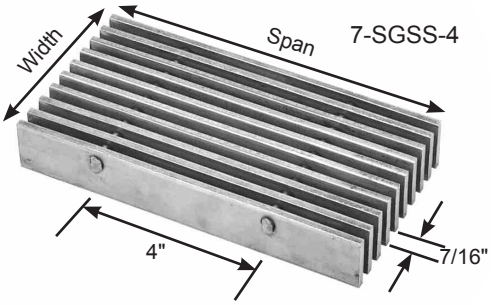

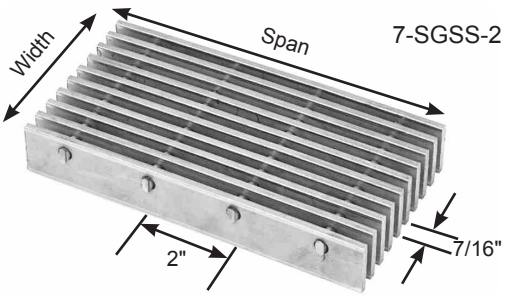

% Open Area*		
Bars	1/8"	3/16"
4" cc	N/A	52%
2" cc	N/A	48%

Bar Size, Inches	Ped Span, Inches	Wt.* Lbs. Sq. Ft.	Sec.Prop Sx*, in³ / Ix*, in⁴		ClearSpan 2'- 0"	2'- 6"	3'- 0"	3'- 6"	4'- 0"	4'- 6"	5'- 0"	5'- 6"	6'- 0"	6'- 6"	7'- 0"	8'- 0"
3/4 x 3/16	58	14.30	0.482	U	1607	1029	714	525	402	317	257					
				D	0.114	0.179	0.257	0.350	0.457	0.578	0.714					
			0.181	C	1607	1286	1071	918	804	714	643					
				D	0.091	0.143	0.206	0.280	0.366	0.463	0.572					
1 x 3/16	73	18.50	0.857	U	2857	1829	1270	933	714	564	457	378	317	271		
				D	0.086	0.134	0.193	0.263	0.343	0.434	0.536	0.649	0.770	0.907		
			0.429	C	2857	2286	1905	1633	1429	1270	1143	1039	952	879		
				D	0.069	0.107	0.154	0.210	0.274	0.347	0.429	0.519	0.617	0.724		
1-1/4 x 3/16	86	22.97	1.339	U	4464	2857	1984	1458	1116	882	714	590	496	423	364	279
				D	0.069	0.107	0.154	0.210	0.274	0.347	0.428	0.518	0.617	0.725	0.839	1.097
			0.837	C	4464	3571	2976	2551	2232	1984	1786	1623	1488	1374	1276	1116
				D	0.055	0.086	0.123	0.168	0.219	0.278	0.343	0.415	0.494	0.580	0.672	0.878
1-1/2 x 3/16	98	27.44	1.929	U	6429	4114	2857	2099	1607	1270	1029	850	714	609	525	402
				D	0.057	0.089	0.129	0.175	0.229	0.289	0.357	0.432	0.514	0.604	0.700	0.915
			1.446	C	6429	5143	4286	3674	3214	2857	2571	2338	2143	1978	1837	1607
				D	0.046	0.071	0.103	0.140	0.183	0.231	0.286	0.346	0.411	0.483	0.560	0.731
1-3/4 x 3/16	110	30.76	2.625	U	8750	5600	3889	2857	2188	1728	1400	1157	972	828	714	547
				D	0.049	0.077	0.110	0.150	0.196	0.248	0.306	0.370	0.441	0.517	0.600	0.784
			2.297	C	8750	7000	5833	5000	4375	3889	3500	3182	2917	2692	2500	2188
				D	0.039	0.061	0.088	0.120	0.157	0.198	0.245	0.296	0.353	0.414	0.480	0.627
2 x 3/16	122	36.38	3.429	U	11429	7314	5079	3732	2857	2258	1829	1511	1270	1082	933	714
				D	0.043	0.067	0.096	0.131	0.171	0.217	0.268	0.324	0.386	0.453	0.525	0.685
			3.429	C	11429	9143	7619	6531	5714	5079	4572	4156	3810	3517	3265	2857
				D	0.034	0.054	0.077	0.105	0.137	0.174	0.214	0.259	0.309	0.362	0.420	0.549
2-1/4 x 3/16	133	41.05	4.339	U	14465	9257	6429	4723	3616	2857	2314	1913	1607	1369	1181	904
				D	0.038	0.060	0.086	0.117	0.152	0.193	0.238	0.288	0.343	0.402	0.467	0.610
			4.882	C	14465	11572	9643	8265	7232	6429	5786	5260	4822	4451	4133	3616
				D	0.030	0.048	0.069	0.093	0.122	0.154	0.190	0.230	0.274	0.322	0.373	0.488
2-1/2 x 3/16	144	45.35	5.357	U	17857	11429	7937	5831	4464	3527	2857	2361	1984	1691	1458	1116
				D	0.034	0.054	0.077	0.105	0.137	0.174	0.214	0.259	0.309	0.362	0.420	0.549
			6.697	C	17857	14286	11905	10204	8929	7937	7143	6494	5952	5495	5102	4464
				D	0.027	0.043	0.062	0.084	0.110	0.139	0.171	0.207	0.247	0.290	0.336	0.439

U - Safe uniform load in pounds/sq. ft.
C - Safe concentrated load in pounds/ft.grating width
D - Deflection in inches
Loads and deflections are theoretical and based on a unit stress of 20,000 psi.

*Based on 27.429 bars/ft. of grating width. Bearing bars 7/16" c.c. Add .6 lbs./sq. ft. for 7-SGSS-2. 1/8" bearing bars available by inquiry. **Note:** Grating for spans to the left of the heavy line have a deflection less than 1/4" for uniform loads of 100 lbs./sq. ft. This is the maximum deflection to afford pedestrian comfort and can be exceeded for other types of load at the discretion of the engineer. The actual Ped (pedestrian) Span under this condition is shown above for each size of grating. When serrated grating is specified, the depth of grating required for a specific load will be 1/4" greater than that shown in these tables. 3/4" x 3/16" serrated grating is not available.

Panel Width Chart (in.) - 7-SGSS-4 & 7-SGSS-2 Dimensions Are Out-to-Out of Bearing Bars**

No. of Bars	2	3	4	5	6	7	8	9	10	11	12	13	14	15	16
3/16" Bars	5/8	1-1/16	1-1/2	1-15/16	2-3/8	2-13/16	3-1/4	3-11/16	4-1/8	4-9/16	5	5-7/16	5-7/8	6-5/16	6-3/4
No. of Bars	17	18	19	20	21	22	23	24	25	26	27	28	29	30	31
3/16" Bars	7-3/16	7-5/8	8-1/16	8-1/2	8-15/16	9-3/8	9-13/16	10-1/4	10-11/16	11-1/8	11-9/16	12	12-7/16	12-7/8	13-5/16
No. of Bars	32	33	34	35	36	37	38	39	40	41	42	43	44	45	46
3/16" Bars	13-3/4	14-3/16	14-5/8	15-1/16	15-1/2	15-15/16	16-3/8	16-13/16	17-1/4	17-11/16	18-1/8	18-9/16	19	19-7/16	19-7/8
No. of Bars	47	48	49	50	51	52	53	54	55	56	57	58	59	60	61
3/16" Bars	20-5/16	20-3/4	21-3/16	21-5/8	22-1/16	22-1/2	22-15/16	23-3/8	23-13/16	24-1/4	24-11/16	25-1/8	25-9/16	26	26-7/16
No. of Bars	62	63	64	65	66	67	68	69	70	71	72	73	74	75	76
3/16" Bars	26-7/8	27-5/16	27-3/4	28-3/16	28-5/8	29-1/16	29-1/2	29-15/16	30-3/8	30-13/16	31-1/4	31-11/16	32-1/8	32-9/16	33
No. of Bars	77	78	79	80	81	82	83								
3/16" Bars	33-7/16	33-7/8	34-5/16	34-3/4	35-3/16	35-5/8	36-1/16								

**Add 1/4" for extended cross bars. Deduct 1/16" for 1/8" bearing bars. Standard panel widths indicated in red.